GREEN SPARK AUTOMATION
Solutions for a Better Tomorrow
Smart Energy and Sustainable Growth
32 Ganapathy Pudhur, Ganapathy 3rd Street, Coimbatore, Tamil Nadu - 641006
GSTIN: 33ABEFG6306Q1Z5 | PAN: ABEFG6306Q
Email: sales@greensparkautomation.com |info@greensparkautomation.com | Mob: 93154 34031 / 94437 94493

LAFERTGROUP
Member of Sumitomo Drive Technologies

IE6 HPS RANGE
HYPER EFFICIENCY

SYNCHRONOUS PM MOTORS
0.18 TO 30 KW

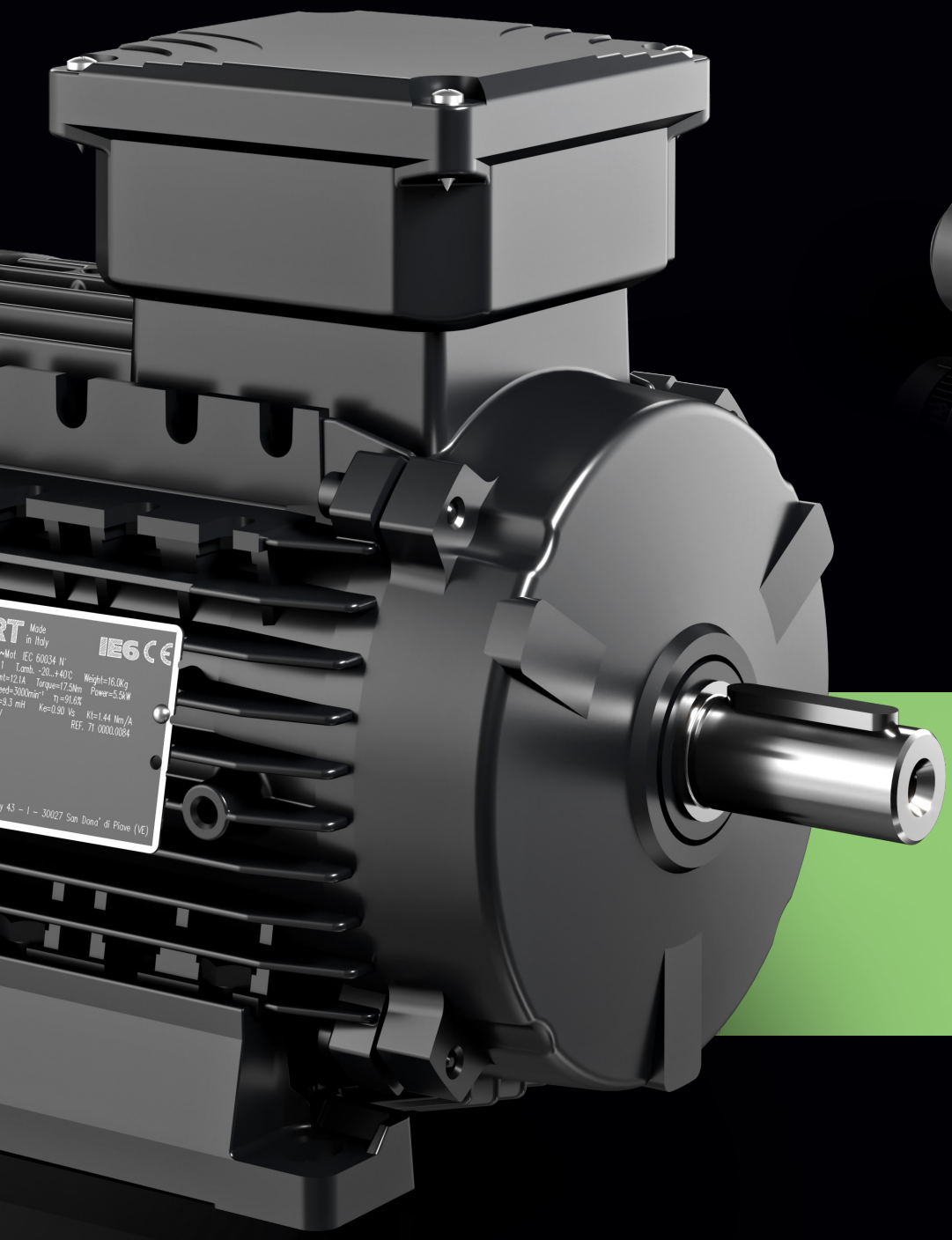

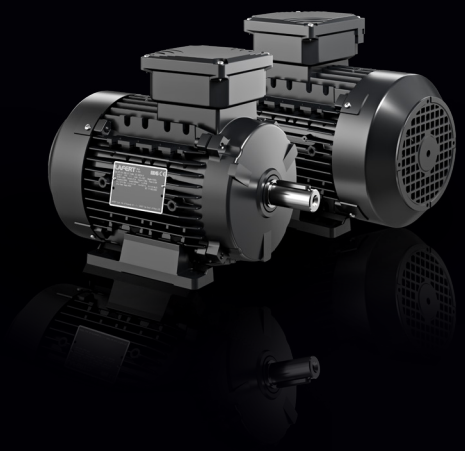

IE6

BROCHURE 2026

IE6 c UL us

IE6: THE NEW FRONTIER OF EFFICIENCY IN ELECTRIC MOTORS

The IE6 HPS Hyper Efficiency range represents the latest frontier of PM Synchronous Motors, exceeding every efficiency standard available on the market today.

POWER, COMPACTNESS AND EFFICIENCY AT THE SERVICE OF MODERN INDUSTRY

The IE6 HPS Hyper Efficiency range redefines the standards for power, compactness and lightness, delivering **once again superior performance in a compact size**.

HYPER EFFICIENCY: A NEW STANDARD FOR THE MARKET

Compared to IE5, energy losses have been reduced by 20%, without sacrificing compactness of volume and weight.
The combination with Lafert VFDs fully exploits the potential of IE6 motors.

Power rating: 0.18kW to 30kW - 0.25HP to 40HP

Torque: 2 Nm to 190 Nm - Speed: up to 4500 rpm

Frame size: 56 - 71 - 90 - 112 - 132 - 160

IPM (Interior Permanent Magnets) or **SMPM** (Surface Mounted Permanent Magnets) design

Design flexibility by customizing both active and mechanical parts

IEC mechanical configurations (B14, B5 etc)
NEMA mounting design
PAD mounting design

IE6 c UL us

EFFICIENCY @ 3000RPM

Rated Output [kW]	IEC Motor frame	HP Motor frame	IE3 Efficiency [%]	HPS IE4 Efficiency [%]	HPS IE5 Efficiency [%]	HPS IE6 Efficiency [%]
0.75	80	71	80.7	81.5	84.6	87.3
1.1			82.7	83.3	86.2	88.7
1.5	90		84.2	84.8	87.4	89.7
2.2			85.9	86.4	88.9	90.9
3	100	90	87.1	87.7	89.9	91.8
4	112		88.1	88.7	90.7	92.4
5.5			89.2	89.7	91.6	93.2
7.5	132	112	90.1	90.6	92.4	93.8
11	160		91.2	91.6	93.2	94.5
15			91.9	92.4	93.7	94.9
18.5		132	92.4	92.8	94.2	95.3
22	180		92.7	93.2	94.4	95.5
30	200		93.3	93.7	94.9	95.9

REDUCTION OF DIMENSIONS & WEIGHT

AC motor size 112

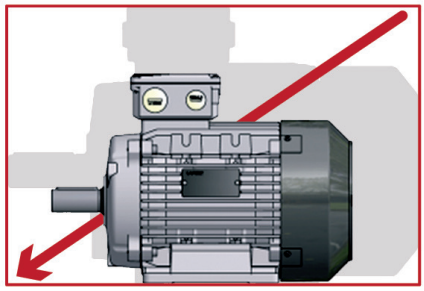

HPS motor size 90

Weight AC Motor
Size 112 - 5.5 kW - 34 Kg
Size 132 - 7.5 kW - 53 Kg
Weight HPS Motor
Size 90 – 5.5 kW - 16 Kg
Size 112 - 7.5 kW - 26 Kg

HYPER EFFICIENCY MOTORS – IE6

IE6

EFFICIENCY LEVEL ACCORDING TO IEC TS 60034-30-2:2016 - IE5 reducing losses by 20%
DEGREE OF PROTECTION IP 55

VALUES @ 400V

TEMPERATURE RISE TO CLASS B

Type	Size	Rated speed n rpm	Rated power P_n kW	Rated torque M_n Nm	Peak torque M_{pk} Nm	Voltage constant K_e Vs	Torque constant K_t Nm/A	BEMF at rated speed E_n Vrs	Rated current I_n Arms	Efficiency IE6 η %	Weight Kg
1500 rpm											
IE6 HPS 56 1500 4	**56**	1500	0.18	1.2	3.4	1.73	3	272	0.4	80.1	3
IE6 HPS 56 1500 5	**56**	1500	0.25	1.6	4.8	1.73	3	272	0.5	82.7	3.2
IE6 HPS 71 1500 12	**71**	1500	0.55	3.5	10.5	1.73	3	272	1.2	87.6	5.4
IE6 HPS 71 1500 16	**71**	1500	0.75	4.8	14.4	1.73	3	272	1.6	89.0	6.2
IE6 HPS 71 1500 23	**71**	1500	1.1	7.0	21.0	1.73	3	272	2.3	90.3	7.2
IE6 HPS 90 1500 32	**S-L**	1500	1.5	9.6	28.7	1.73	3	272	3.2	91.1	14
IE6 HPS 90 1500 47	**S-L**	1500	2.2	14.0	42.0	1.73	3	272	4.7	92.0	18
IE6 HPS 90 1500 64	**XL**	1500	3	19.1	57.3	1.73	3	272	6.4	92.7	19
IE6 HPS 112 1500 85	**M**	1500	4	25.5	76.4	1.73	3	272	8.5	93.3	26
IE6 HPS 112 1500 117	**M**	1500	5.5	35.0	105.1	1.73	3	272	11.7	93.9	30
IE6 HPS 112 1500 159	**XL**	1500	7.5	47.8	143.3	1.73	3	272	15.9	94.5	33
IE6 HPS 132 1500 233	**XL**	1500	11	70.0	210.1	1.73	3	272	23.3	95.0	56
IE6 HPS 132 1500 318	**XXL**	1500	15	95.5	286.5	1.73	3	272	31.8	95.5	65
IE6 HPS 160 1500 233	**M**	1500	11	70	175	1.73	3	272	23.3	95.0	85
IE6 HPS 160 1500 318	**M**	1500	15	95	239	1.73	3	272	31.8	95.5	95
IE6 HPS 160 1500 393	**M**	1500	18.5	118	294	1.73	3	272	39.3	95.7	100
IE6 HPS 160 1500 467	**L**	1500	22	140	350	1.73	3	272	46.7	95.9	115
IE6 HPS 160 1500 637	**L**	1500	30	191	477	1.73	3	272	63.7	96.2	120
1800 rpm											
IE6 HPS 56 1800 4	**56**	1800	0.18	1.0	2.9	1.45	2.5	272	0.4	80.1	3
IE6 HPS 56 1800 5	**56**	1800	0.25	1.3	4.0	1.45	2.5	272	0.5	82.7	3.2
IE6 HPS 71 1800 12	**71**	1800	0.55	2.9	8.8	1.45	2.5	272	1.2	87.6	5.4
IE6 HPS 71 1800 16	**71**	1800	0.75	4.0	11.9	1.45	2.5	272	1.6	89.0	6.2
IE6 HPS 71 1800 23	**71**	1800	1.1	5.8	17.5	1.45	2.5	272	2.3	90.3	7.2
IE6 HPS 90 1800 32	**S-L**	1800	1.5	8.0	23.9	1.45	2.5	272	3.2	91.1	14
IE6 HPS 90 1800 46	**S-L**	1800	2.2	11.7	35.0	1.45	2.5	272	4.6	92.0	18
IE6 HPS 90 1800 64	**S-L**	1800	3	15.9	47.7	1.45	2.5	272	6.3	92.7	19
IE6 HPS 112 1800 84	**M**	1800	4	21.2	63.7	1.45	2.5	272	8.4	93.3	26
IE6 HPS 112 1800 116	**M**	1800	5.5	29.2	87.5	1.45	2.5	272	11.6	93.9	30
IE6 HPS 112 1800 158	**M**	1800	7.5	39.8	119.4	1.45	2.5	272	15.8	94.5	33
IE6 HPS 132 1800 232	**M**	1800	11	58.4	175.1	1.45	2.5	272	23.2	95.0	56
IE6 HPS 132 1800 317	**XXL**	1800	15	79.6	238.7	1.45	2.5	272	31.7	95.5	65
IE6 HPS 132 1800 391	**XXL**	1800	18.5	98.1	294.4	1.45	2.5	272	39.1	95.7	66
IE6 HPS 160 1800 232	**M**	1800	11	58	146	1.45	2.5	272	23.2	95.0	85
IE6 HPS 160 1800 317	**M**	1800	15	80	199	1.45	2.5	272	31.7	95.5	95
IE6 HPS 160 1800 391	**M**	1800	18.5	98	245	1.45	2.5	272	39.1	95.7	100
IE6 HPS 160 1800 465	**L**	1800	22	117	292	1.45	2.5	272	46.5	95.9	115
IE6 HPS 160 1800 634	**L**	1800	30	159	398	1.45	2.5	272	63.4	96.2	120

* According to IEC TS 60034-30-2, the IE class limit values are reduced by adding the additional harmonic losses caused by the drive: 15% additional losses for motors up to 90 kW

HYPER EFFICIENCY MOTORS – IE6

IE6

EFFICIENCY LEVEL ACCORDING TO IEC TS 60034-30-2:2016 - IE5 reducing losses by 20%
DEGREE OF PROTECTION IP 55

VALUES @ 400V

TEMPERATURE RISE TO CLASS B

Type	Size	Rated speed n rpm	Rated power P_n kW	Rated torque M_n Nm	Peak torque M_{pk} Nm	Voltage constant K_e Vs	Torque constant K_t Nm/A	BEMF at rated speed E_n Vrs	Rated current I_n Arms	Efficiency IE6 η %	Weight Kg
3000 rpm											
IE6 HPS 56 3000 5	**56**	3000	0.25	0.8	2.4	0.87	1.5	272	0.5	79.7	3
IE6 HPS 56 3000 8	**56**	3000	0.37	1.2	3.5	0.87	1.5	272	0.8	82.9	3
IE6 HPS 56 3000 12	**56**	3000	0.55	1.8	5.3	0.87	1.5	272	1.2	85.7	3.2
IE6 HPS 71 3000 16	**71**	3000	0.75	2.4	7.2	0.87	1.5	272	1.6	87.3	5.2
IE6 HPS 71 3000 23	**71**	3000	1.1	3.5	10.5	0.87	1.5	272	2.3	88.7	6
IE6 HPS 71 3000 32	**71**	3000	1.5	4.8	14.3	0.87	1.5	272	3.2	89.7	6.5
IE6 HPS 71 3000 47	**71**	3000	2.2	7.0	21.0	0.87	1.5	272	4.7	90.9	7.2
IE6 HPS 90 3000 47	**S-L**	3000	2.2	7.0	21.0	0.87	1.5	272	4.7	90.9	12
IE6 HPS 90 3000 64	**S-L**	3000	3	9.6	28.7	0.87	1.5	272	6.4	91.8	12
IE6 HPS 90 3000 85	**S-L**	3000	4	12.7	38.2	0.87	1.5	272	8.5	92.4	14
IE6 HPS 90 3000 117	**S-L**	3000	5.5	17.5	52.5	0.87	1.5	272	11.7	93.2	16
IE6 HPS 112 3000 117	**M**	3000	5.5	17.5	52.5	0.87	1.5	272	11.7	93.2	23
IE6 HPS 112 3000 159	**M**	3000	7.5	23.9	71.6	0.87	1.5	272	15.9	93.8	26
IE6 HPS 112 3000 233	**M**	3000	11	35.0	105.1	0.87	1.5	272	23.3	94.5	30
IE6 HPS 112 3000 318	**M**	3000	15	47.8	143.3	0.87	1.5	272	31.8	94.9	33
IE6 HPS 132 3000 318	**M**	3000	15	47.8	143.3	0.87	1.5	272	31.8	94.9	58
IE6 HPS 132 3000 393	**XL**	3000	18.5	58.9	176.7	0.87	1.5	272	39.3	95.3	59
IE6 HPS 132 3000 467	**XXL**	3000	22	70.0	210.1	0.87	1.5	272	46.7	95.5	67
IE6 HPS 132 3000 636	**XXL**	3000	30	95.4	286.0	0.87	1.5	272	63.6	95.9	72
IE6 HPS 160 3000 634	**L**	3000	30	95.4	239.0	0.87	1.5	272	63.4	95.9	120
3600 rpm											
IE6 HPS 56 3600 5	**56**	3600	0.25	0.7	2.0	0.73	1.26	272	0.5	79.7	3
IE6 HPS 56 3600 8	**56**	3600	0.37	1.0	2.9	0.73	1.26	272	0.8	82.9	3
IE6 HPS 56 3600 12	**56**	3600	0.55	1.5	4.4	0.73	1.26	272	1.2	85.7	3.2
IE6 HPS 71 3600 16	**71**	3600	0.75	2.0	6.0	0.73	1.26	272	1.6	87.3	5.2
IE6 HPS 71 3600 23	**71**	3600	1.1	2.9	8.8	0.73	1.26	272	2.3	88.7	6
IE6 HPS 71 3600 32	**71**	3600	1.5	4.0	11.9	0.73	1.26	272	3.2	89.7	6.5
IE6 HPS 71 3600 46	**71**	3600	2.2	5.8	17.5	0.73	1.26	272	4.6	90.9	7.2
IE6 HPS 90 3600 46	**S-L**	3600	2.2	5.8	17.5	0.73	1.26	272	4.6	90.9	12
IE6 HPS 90 3600 63	**S-L**	3600	3	8.0	23.9	0.73	1.26	272	6.3	91.8	12
IE6 HPS 90 3600 84	**S-L**	3600	4	10.6	31.8	0.73	1.26	272	8.4	92.4	14
IE6 HPS 90 3600 116	**S-L**	3600	5.5	14.6	43.8	0.73	1.26	272	11.6	93.2	16
IE6 HPS 112 3600 116	**M**	3600	5.5	14.6	43.8	0.73	1.26	272	11.6	93.2	23
IE6 HPS 112 3600 158	**M**	3600	7.5	19.9	59.7	0.73	1.26	272	15.8	93.8	26
IE6 HPS 112 3600 232	**M**	3600	11	29.2	87.5	0.73	1.26	272	23.2	94.5	30
IE6 HPS 112 3600 317	**M**	3600	15	39.8	119.4	0.73	1.26	272	31.7	94.9	33
IE6 HPS 132 3600 317	**M**	3600	15	39.8	119.4	0.73	1.26	272	31.7	94.9	58
IE6 HPS 132 3600 391	**XL**	3600	18.5	49.1	147.2	0.73	1.26	272	39.1	95.3	59
IE6 HPS 132 3600 465	**XXL**	3600	22	58.4	175.1	0.73	1.26	272	46.5	95.5	67
IE6 HPS 132 3600 634	**XXL**	3600	30	79.6	238.7	0.73	1.26	272	63.4	95.9	72
IE6 HPS 160 3600 629	**L**	3600	30	79.6	199.0	0.73	1.26	272	62.9	95.9	120
4500 rpm											
IE6 HPS 56 4500 8	**56**	4500	0.37	0.8	2.4	0.58	1	272	0.8	82.9	3
IE6 HPS 56 4500 12	**56**	4500	0.55	1.2	3.5	0.58	1	272	1.2	85.7	3
IE6 HPS 56 4500 16	**56**	4500	0.75	1.6	4.8	0.58	1	272	1.6	87.3	3.2
IE6 HPS 71 4500 23	**71**	4500	1.1	2.3	7.0	0.58	1	272	2.3	88.7	5.2
IE6 HPS 71 4500 32	**71**	4500	1.5	3.2	9.6	0.58	1	272	3.2	89.7	6
IE6 HPS 71 4500 47	**71**	4500	2.2	4.7	14.0	0.58	1	272	4.7	90.9	6.5
IE6 HPS 71 4500 64	**71**	4500	3	6.4	19.1	0.58	1	272	6.4	91.7	7.2
IE6 HPS 90 4500 64	**S-L**	4500	3	6.4	19.1	0.58	1	272	6.4	91.7	14
IE6 HPS 90 4500 85	**S-L**	4500	4	8.5	25.5	0.58	1	272	8.5	92.4	17
IE6 HPS 90 4500 117	**S-L**	4500	5.5	11.7	35.0	0.58	1	272	11.7	93.1	18
IE6 HPS 90 4500 159	**XL**	4500	7.5	15.9	47.8	0.58	1	272	15.9	94.0	19

* According to IEC TS 60034-30-2, the IE class limit values are reduced by adding the additional harmonic losses caused by the drive: 15% additional losses for motors up to 90 kW

FRAME SIZE 56 - 71 - 90 - 112 - 132 - 160 IM B3*

* For mounting arrangements IM B5 - IM B14, please refer to the catalogue

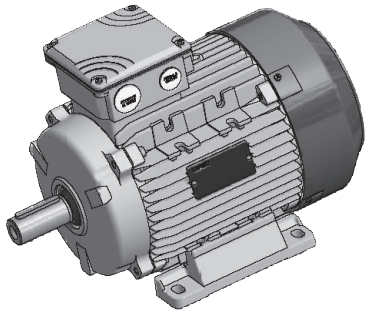

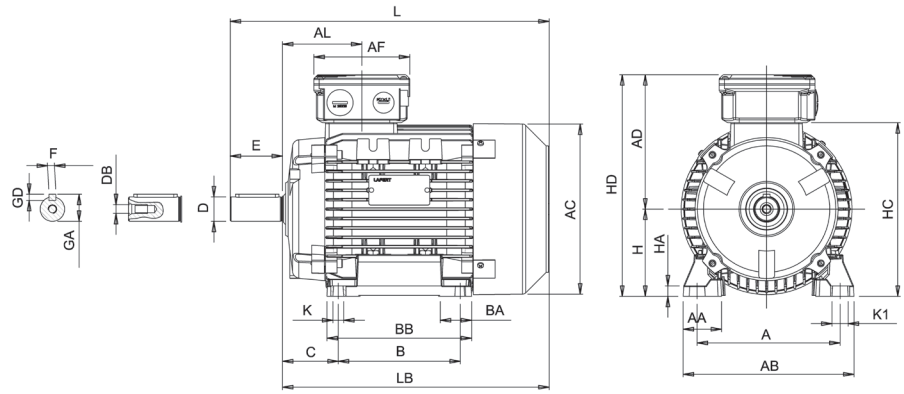

IEC	H	A	B	C	K[1]	AB	BB	AD[2]	HD[2]	AC	HC	HA
56	56	90	71	36	6	107	86	92	148	110	109	8
71	71	112	90	45	8	135	108	114	185	142	142	9
90S	90	140	100	56	10	170	150	148	238	177	181	11
90L	90	140	125	56	10	170	150	148	238	177	181	11
112M	112	190	140	70	12.5	220	176	171	283	225	226	15
112XL	112	190	140	70	12.5	220	176	171	283	225	226	15
132M	132	216	178	89	12	256	218	195	327	248	261	17
132XL	132	216	178	89	12	256	218	195	327	248	261	17
132XXL	132	216	178	89	12	256	218	195	327	248	261	17
160M	160	254	210	108	14	320	270	238	398	317	316	23
160L	160	254	254	108	14	320	310	238	398	317	316	23

IEC	K1	L	LB	AL	AF	BA	AA	D	E	F	GD	GA	DB[3]
56	9	188	168	61	93	27	27	14	30	5	5	16	M5
71	17	245	215	75	93	22	30	19	40	6	6	22	M6
90S	15	317	267	85	110	28/53	37	24	50	8	7	27	M8
90L	15	317	267	85	110	28/53	37	24	50	8	7	27	M8
112M	19	388	328	92	110	46	48	28	60	8	7	31	M10
112XL	19	410	350	92	110	46	48	28	60	8	7	31	M10
132M	20	485	405	122	137	45	59	38	80	10	8	41	M12
132XL	20	505	425	122	137	45	59	38	80	10	8	41	M12
132XXL	20	556	476	122	137	45	59	38	80	10	8	41	M12
160M	18	608	498	146	155	65	76	42[4]	110	12[4]	8[4]	45[4]	M16
160L	18	652	542	168	155	65	76	48	110	14	9	51.5	M16

1) Clearance hole for screw 2) Maximum dimension 3) Centering holes in shaft extensions to DIN 332 part 2
4) For type HPS160M 18.5 kW, please refer to HPS160L

LAFERTGROUP
Member of Sumitomo Drive Technologies

Lafert S.p.A.
Via J.F. Kennedy,43
30027 San Donà di Piave (Venice), Italy
Tel. +39 / 0421 229 611
lafert.info@shi-g.com

www.lafert.com

Branches & Partners

Lafert GmbH
Wolf-Hirth-Straße 10
71034 Böblingen
Germany
Phone +49 175 550 4526
lge.info@shi-g.com

Lafert Electric Motors Ltd.
Unit 17 Orion Way
Crewe, Cheshire CW1 6NG
United Kingdom
Phone +44 / (0) 1270 270 022
luk.info@shi-g.com

Lafert Moteurs S.A.S.
L'Isle d'Abeau Parc de Chesnes
75, rue de Malacombe
38070 St. Quentin-Fallavier
France
Phone +33 / 474 95 41 01
lfr.info@shi-g.com

Lafert Motores Electricos, S.L.U.
Polígono Pignatelli, Nave 27
50410 Cuarte de Huerva (Zaragoza)
Spain
Phone +34 / 976 503 822
les.info@shi-g.com

Lafert N.A. (North America)
5620 Kennedy Road - Mississauga
Ontario L4Z 2A9
Canada
Phone +1 / 800/661 6413 - 905/629 1939
lna.info@shi-g.com

Lafert Electric Motors (Australia)
Factory 3, 117-123 Abbott Road,
Hallam - VIC 3803
Australia
Phone +61 / (0)3 95 46 75 15
info@lafertaust.com.au

Lafert Singapore Pte Ltd
48 Hillview Terrace #06-06
Hillview Building - Singapore 669269
Phone +65 / 67630400 - 67620400
info@lafert.com.sg

Lafert (Suzhou) Co., Ltd.
No.3 Industrial Plant Building Yue Xi Phase 3,
Tian E Dang Lu 2011, 215104 Wuzong
Economic Development Zone, Suzhou
China
Phone +86 / 512 6687 0618
lsu.info@shi-g.com

MKTG-10-294/26 dnaitalia.com