WOLONG

Power your future

GREEN SPARK AUTOMATION

Solutions for a Better Tomorrow

Smart Energy and Sustainable Growth

32 Ganapathy Pudhur, Ganapathy 3rd Street, Coimbatore, Tamil Nadu - 641006

GSTIN: 33ABEFG6306Q1Z5 | PAN: ABEFG6306Q

Email: sales@greensparkautomation.com |info@greensparkautomation.com | Mob: 93154 34031 / 94437 94493

Energy Saver SD Cast Iron Motors

Severe-Duty NEMA B

3 Phase, 60 Hz

230/460V

1 - 200 HP

NEMA B Motors
Robust and Reliable Design

Wolong severe-duty cast iron motors are used in a wide range of applications in extreme industrial environments such as petroleum, chemical, pulp and paper, water and wastewater, mining and mineral processing , among others.

These motors feature heavy-duty cast iron frames, endshields, and conduit boxes, heavy gauge steel fan covers, and non-sparking fans and are proven to thrive in severe applications.

Benefits

- High efficiency for low running costs
- Low noise levels
- High torque with smooth acceleration and low current
- 3 year warranty

Key Features

NEMA Frames	143 - 447
Poles	2, 4
Horsepower Range	1 - 200
Voltage	208-230/460
Shaft Extension	284-365 2 poles TS, all others T
Agency Approvals	CSA - Certification / Efficiency
Altitude	3300 ft
Maximum Ambient	40°C @ 1.25SF @ 60Hz
Bearing L10 Life	Direct Coupled - 65,000 hrs
Bearing Type	Deep Groove Ball Bearings
Conduit Box Rotation	90 degree increments
Div 2 Temp Codes	Division 2 Class I Groups A, B, C, D, Zone 2; Groups IIA & IIB T3 with VFD
Efficiency	NEMA Premium
Enclosure	TEFC, IP55
Field Modifiable to F2	Yes with repositional feet
Frequency	60Hz or Variable on PWM drive
Insulation	Class F, Class B Temperature Rise, Non-Hygroscopic, and Anti-Fungus

Inverter Capabilities	NEMA MG1 Part 31 VFD 5:1 Constant Torque 10:1 Variable Torque
Lifting	Eyebolt
Material	Conduit Box: Cast Iron Endshield: Cast Iron Fan: Non-Sparking Fan Cover: Heavy Gauge Steel Frame: Cast Iron
Mounting	Horizontal Foot Mounted / C-Face
Mounting Holes	Dual drilled for multiple mounting
NEMA Design	B
Service Factor	1.25
Shaft	45# steel
Sound Power	NEMA MG1 Part 9
Tests	NEMA Routine
Vibration	NEMA Grade A. 2-pole motors tested on rigid base.
Winding Temp. Rise	Class B @ 1.0SF

Ratings

NEMA B (IP55)			Foot Mounted			C-Face		
HP	RPM	Volts	Frame	Cat. No.	Model No.	Frame	Cat. No.	Model No.
1	3600	208-230/460	143T	**WV659**	5KS143BWC120	-	-	-
1	1800	208-230/460	143T	**WV660**	5KS143BWC205	143TC	**WV580**	5KS143KWC205
1.5	3600	208-230/460	143T	**WV658**	5KS143BWC105	-	-	-
1.5	1800	208-230/460	-	-	-	143TC	**WV579**	5KS143KWC105
2	3600	208-230/460	145T	**WV661**	5KS145BWC105	145TC	**WV581**	5KS145KWC105
2	1800	208-230/460	145T	**WV663**	5KS145BWC220	-	-	-
3	3600	208-230/460	182T	**WV665**	5KS182BWC105	182TC	**WV584**	5KS182KWC105
3	1800	208-230/460	182T	**WV666**	5KS182BWC205	182TC	**WV585**	5KS182KWC205
5	3600	208-230/460	184T	**WV669**	5KS184BWC105	184TC	**WV588**	5KS184KWC105
5	1800	208-230/460	184T	**WV672**	5KS184BWC205	184TC	**WV589**	5KS184KWC205
7.5	3600	208-230/460	213T	**WV677**	5KS213BWC105	213TC	**WV592**	5KS213KWC105
7.5	1800	208-230/460	213T	**WV678**	5KS213BWC205	213TC	**WV593**	5KS213KWC205
10	3600	208-230/460	215T	**WV681**	5KS215BWC105	215TC	**WV596**	5KS215KWC105
10	1800	208-230/460	215T	**WV682**	5KS215BWC205	215TC	**WV597**	5KS215KWC205
15	3600	208-230/460	254T	**WV687**	5KS254BWC105	254TC	**WV600**	5KS254KWC105
15	1800	208-230/460	254T	**WV688**	5KS254BWC205	254TC	**WV601**	5KS254KWC205
20	3600	208-230/460	256T	**WV693**	5KS256BWC105	256TC	**WV604**	5KS256KWC105
20	1800	208-230/460	256T	**WV694**	5KS256BWC205	256TC	**WV605**	5KS256KWC205
25	3600	208-230/460	284TS	**WV697**	5KS284BWC115	284TSC	**WV608**	5KS284KWC115
25	1800	208-230/460	284T	**WV698**	5KS284BWC205	284TC	**WV609**	5KS284KWC205
30	3600	208-230/460	286TS	**WV701**	5KS286BWC115	286TSC	**WV612**	5KS286KWC115
30	1800	208-230/460	286T	**WV702**	5KS286BWC205	286TC	**WV613**	5KS286KWC205
40	3600	208-230/460	324TS	**WV705**	5KS324BWC115	324TSC	**WV616**	5KS324KWC115
40	1800	208-230/460	324T	**WV706**	5KS324BWC205	324TC	**WV617**	5KS324KWC205
50	3600	208-230/460	326TS	**WV709**	5KS326BWC115	326TSC	**WV620**	5KS326KWC115
50	1800	208-230/460	326T	**WV710**	5KS326BWC205	326TC	**WV621**	5KS326KWC205
60	3600	208-230/460	364TS	**WV713**	5KS364BWC115	364TSC	**WV624**	5KS364KWC115
60	1800	208-230/460	364T	**WV714**	5KS364BWC205	364TC	**WV625**	5KS364KWC205
75	3600	200-230/460	365TS	**WV717**	5KS365BWC115	-	-	-
75	1800	200-230/460	365T	**WV718**	5KS365BWC205	365TC	**WV629**	5KS365KWC205
100	3600	230/460	405TS	**WV723**	5KS405BWC115	-	-	-
100	1800	230/460	405T	**WV724**	5KS405BWC205	405TC	**WV635**	5KS405KWC205
125	3600	460	444TS	**WV727**	5KS444BWC118	-	-	-
125	1800	460	444T	**WV728**	5KS444BWC208	444TC	**WV639**	5KS444KWC208
150	3600	460	445TS	**WV731**	5KS445BWC118	-	-	-
150	1800	460	445T	**WV734**	5KS445BWC208	445TC	**WV643**	5KS445KWC208
200	3600	460	447TS	**WV739**	5KS447BWC118	-	-	-
200	1800	460	447T	**WV740**	5KS447BWC208	447TC	**WV647**	5KS447KWC208

WOLONG

140-200 Frame Dimensions

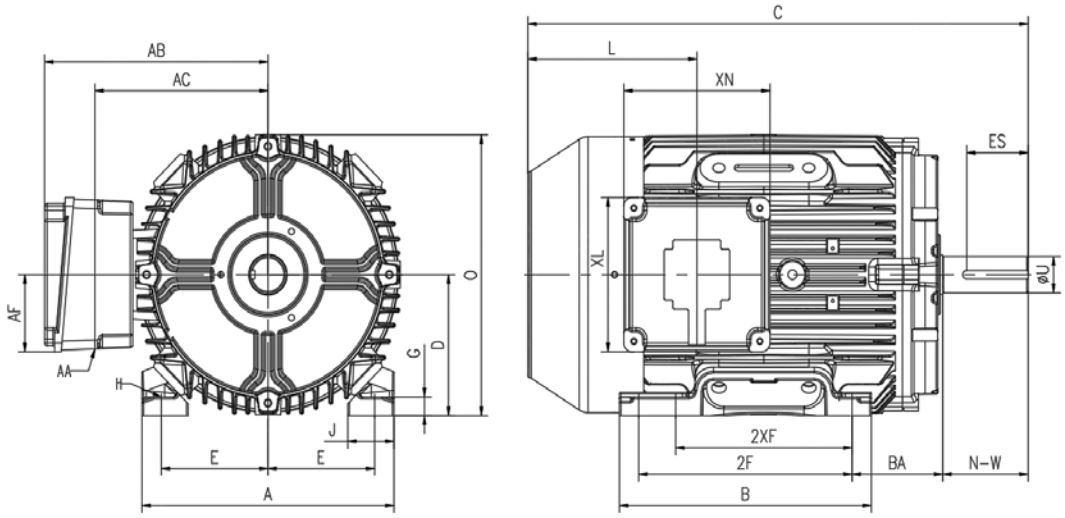

Frame	Weight (lbs)	Dimensions in Inches																	
		Shaft					Mounting												
		Key																	
		Width	Depth	Length	N-W	U	E	H	BA	2F	2XF	A	B	C	D	G	J	L	O
143T	40	0.188	0.188	1.457	2.25	0.875	2.75	0.39	2.25	5.00	4.00	6.89	6.10	13.02	3.50	0.43	1.38	4.73	7.24
145T	42	0.188	0.188	1.457	2.25	0.875	2.75	0.39	2.25	5.00	4.00	6.89	6.10	13.02	3.50	0.43	1.38	4.73	7.24
145T	42	0.188	0.188	1.457	2.25	0.875	2.75	0.39	2.25	5.00	4.00	6.89	6.10	14.07	3.50	0.43	1.38	4.73	7.24
182T	90	0.250	0.250	1.874	2.75	1.125	3.75	0.47	2.75	5.50	4.50	9.06	7.17	16.24	4.50	0.72	1.57	5.41	9.04
184T	102	0.250	0.250	1.874	2.75	1.125	3.75	0.47	2.75	5.50	4.50	9.06	7.17	16.24	4.50	0.72	1.57	5.41	9.04
213T	130	0.312	0.312	2.528	3.38	1.375	4.25	0.47	3.50	7.00	5.50	10.3	8.66	19.95	5.25	0.65	1.85	6.93	10.37
215T	150	0.312	0.312	2.528	3.38	1.375	4.25	0.47	3.50	7.00	5.50	10.3	8.66	19.95	5.25	0.65	1.85	6.93	10.37
254T	280	0.375	0.375	3.063	4.00	1.625	5.00	0.59	4.25	10.0	8.25	11.97	11.8	23.45	6.25	0.87	2.17	7.91	12.36
256T	280	0.375	0.375	3.063	4.00	1.625	5.00	0.59	4.25	10.0	8.25	11.97	11.8	23.45	6.25	0.87	2.17	7.91	12.36
284T	315	0.500	0.500	3.500	4.63	1.875	5.50	0.59	4.75	11.0	9.50	13.54	12.8	26.53	7.00	0.87	2.52	9.22	14.09
286TS	368	0.375	0.375	2.059	3.25	1.625	5.50	0.59	4.75	11.0	9.50	13.54	12.8	25.16	7.00	0.87	2.52	9.22	14.09
286T	368	0.500	0.500	3.500	4.63	1.875	5.50	0.59	4.75	11.0	9.50	13.54	12.8	26.53	7.00	0.87	2.52	9.22	14.09

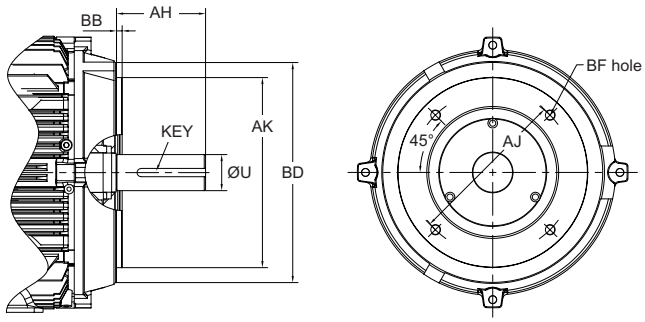

Frame	C-Face Dimensions in Inches					
	AJ	AK	BB	BD	BF	AH
143TC-145TC	5.88	4.50	0.125	6.50	3/8-16	2.12
182TC-184TC	7.25	8.50	0.250	9.00	1/2-13	2.76
213TC-215TC	7.25	8.50	0.250	9.00	1/2-13	3.34
254TC-256TC	7.25	8.50	0.250	10.00	1/2-13	4.00
284TSC-286TSC	9.00	10.50	0.250	11.25	1/2-13	4.61
284TC-286TC	9.00	10.50	0.250	11.25	1/2-13	4.61

Frame	Nom. HP	Approx. Vol ($inch^3$)	Conduit Box Dimensions in Inches					
			AA	AB	AC	AF	XL	XN
143-145	2	40	0.75	6.47	5.08	2.36	4.72	4.72
182-184	5	65	0.75	7.78	6.11	2.66	5.31	5.31
213-215	10	65	1.00	8.80	7.16	2.66	5.31	5.31
254-256	20	144	1.25	10.59	8.50	3.43	6.85	6.85
284-286	30	144	1.50	11.42	9.33	3.43	6.85	6.85

* A tapped NPT hole is provided for the conduit size listed in Column AA

320-440 Frame Dimensions

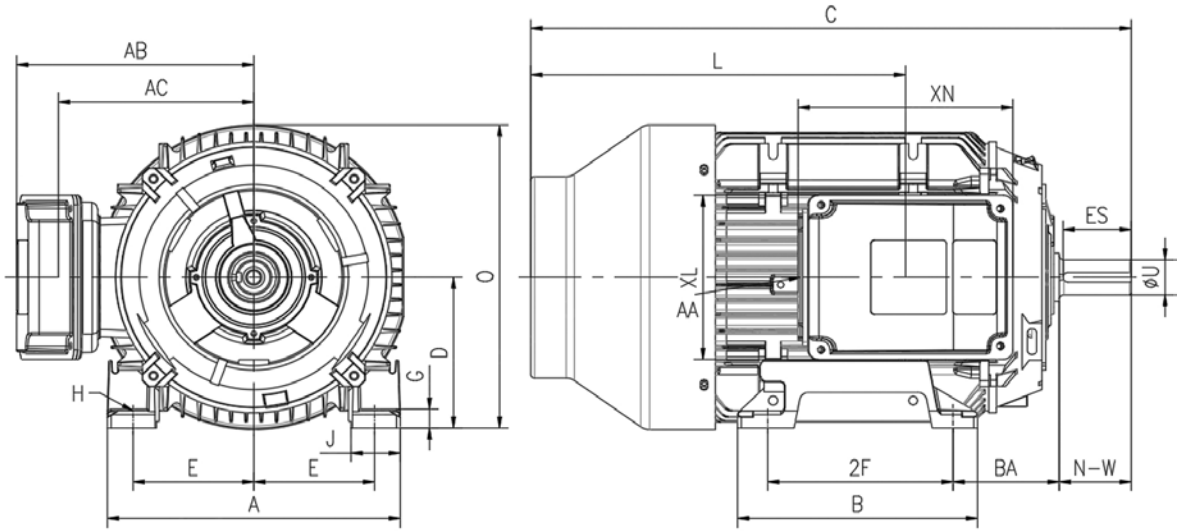

Frame	Weight (lbs)	Dimensions in Inches																	
		Shaft					Mounting												
		Key																	
		Width	Depth	Length	N-W	U	E	H	BA	2F	2XF	A	B	C	D	G	J	L	O
324T	650	0.500	0.500	5.039	5.25	2.125	6.25	0.68	5.25	10.50	15.25	12.50	32.75	1.00	2.50	19.50	16.14	19.50	16.14
324TS	650	0.500	0.500	3.543	3.75	1.875	6.25	0.68	5.25	10.50	15.25	12.50	31.25	1.00	2.50	19.50	16.14	19.50	16.14
326T	750	0.500	0.500	5.039	5.25	2.125	6.25	1.07	5.25	12.00	15.25	14.50	34.05	1.00	2.50	21.00	16.14	21.00	16.14
326TS	750	0.500	0.500	3.543	3.75	1.875	6.25	1.07	5.25	12.00	15.25	14.50	32.55	1.00	2.50	21.00	16.14	21.00	16.14
364T	914	0.625	0.625	5.512	5.88	2.375	7.00	0.68	5.88	11.25	16.75	14.00	36.38	1.13	2.75	22.40	17.63	22.40	17.63
364TS	914	0.500	0.500	3.543	3.75	1.875	7.00	0.68	5.88	11.25	16.75	14.00	34.25	1.13	2.75	22.40	17.63	22.40	17.63
365T	1050	0.625	0.625	5.512	5.88	2.375	7.00	0.68	5.88	12.25	16.75	14.72	38.51	1.13	2.75	24.50	17.63	24.50	17.63
365TS	1050	0.500	0.500	3.543	3.75	1.875	7.00	0.68	5.88	12.25	16.75	14.72	36.38	1.13	2.75	24.50	17.63	24.50	17.63
404T	1384	0.750	0.750	6.890	7.25	2.875	8.00	1.03	6.62	12.25	19.00	15.00	42.10	1.13	3.13	26.30	20.00	26.30	20.00
405T	1384	0.750	0.750	6.890	7.25	2.875	8.00	1.03	6.62	13.75	19.00	16.50	42.10	1.13	3.13	26.30	20.00	26.30	20.00
405TS	1384	0.500	0.500	3.543	4.25	2.125	8.00	1.03	6.62	13.75	19.00	16.50	39.00	1.13	3.13	26.30	20.00	26.30	20.00
444T	1512	0.875	0.875	7.480	8.50	3.375	9.00	1.03	7.50	14.50	21.25	17.20	46.60	1.13	3.25	25.70	22.13	25.70	22.13
444TS	1512	0.625	0.625	4.528	4.75	2.375	9.00	1.03	7.50	14.50	21.25	17.20	42.85	1.13	3.25	25.70	22.13	25.70	22.13
445T	1896	0.875	0.875	7.480	8.50	3.375	9.00	1.03	7.50	16.50	21.25	19.20	49.63	1.38	3.25	28.50	22.13	28.50	22.13
445TS	1896	0.625	0.625	4.528	4.75	2.375	9.00	1.03	7.50	16.50	21.25	19.20	45.88	1.38	3.25	28.50	22.13	28.50	22.13
447T	2300	0.875	0.875	7.480	8.50	3.375	9.00	1.03	7.50	20.00	21.25	19.20	49.63	1.38	3.25	28.50	22.13	28.50	22.13
447TS	2300	0.625	0.625	4.528	4.75	2.375	9.00	1.03	7.50	20.00	21.25	19.20	45.88	1.38	3.25	28.50	22.13	28.50	22.13

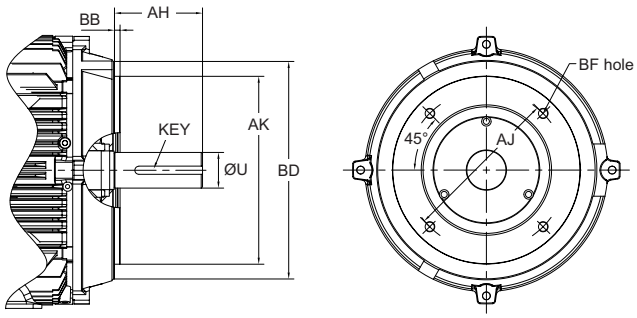

Frame	C-Face Dimensions in Inches					
	AJ	AK	BB	BD	BF	AH
324TSC-326TSC	11.00	12.50	0.250	14.00	5/8-11	3.50
324TC-326TC	11.00	12.50	0.250	14.00	5/8-11	5.00
364TSC-365TSC	11.00	12.50	0.250	14.00	5/8-11	3.50
364TC-365TC	11.00	12.50	0.250	14.00	5/8-11	5.62

Frame	Nom. HP	Approx. Vol ($inch^3$)	Conduit Box Dimensions in Inches					
			AA	AB	AC	AF	XL	XN
324-326	50	305	2.00	12.88	10.63	/	8.75	11.38
364-365	75	402	3.00	14.25	12.00	/	8.75	15.00
404-405	100	402	3.00	15.50	13.25	/	8.75	15.00
444-447	200	806	3.00	20.75	16.00	/	13.00	20.25

* A tapped NPT hole is provided for the conduit size listed in Column AA

WOLONG

WOLONG

Power your future

www.wolongamerica.com

GE is a trademark of General Electric Company.
Manufactured under trademark license.
©2024, Wolong Electric America LLC. All rights reserved
GEA33482-EN (11/2024)