GREEN SPARK AUTOMATION
Solutions for a Better Tomorrow
Smart Energy and Sustainable Growth
32 Ganapathy Pudhur, Ganapathy 3rd Street, Coimbatore, Tamil Nadu - 641006
GSTIN: 33ABEFG6306Q1Z5 | PAN: ABEFG6306Q
Email: sales@greensparkautomation.com |info@greensparkautomation.com | Mob: 93154 34031 / 94437 94493

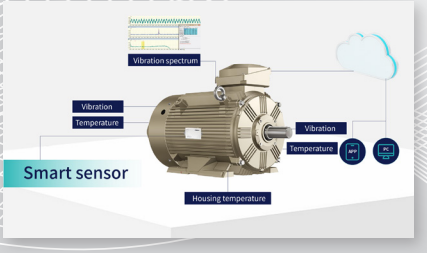

High Performance Drive

Frequency conversion cabinet

iMotorLinx

WEPM5&WEPM

Frequency Control Permanent Magnet Synchronous Motor

WOLONG
Power your future

Contents

01

Wolong Group 03

02

Product Overview 03

Product description
Nomenclature
Specification

03

Motor technology advantages 05

Advantage of WE platform
High power density advantage - Low volume and reduced weight
Lower noise
Maintain constant torque in a wide range of speed regulation
loss reduction
The motor provides ultra-high efficiency at full range of speeds or loads

04

Performance Data 07

IE5 Performance data
IE4 Performance data

05

Motor installation and dimensions 16

B3 Motor installation and dimensions
B35 Motor installation and dimensions
B5&V1 Motor installation and dimensions

06

Technical information 31

Terminal box
Lifting ring
Bearing type

07

Ordering guide 34

08

High Performance Drive & Smart service 26

WD100 High Performance Drive
Wolong Digital Service

Wolong Group

Wolong, founded in 1984 and headquartered in Shaoxing, Zhejiang Province, is a global leading industrial enterprise committed to providing safe, efficient, smart and green power drive system solutions with life-long supporting services to global users.

By utilizing cutting edge permanent magnet, nanotechnology and silicon carbide technologies, Wolong has built the China's first motor material demonstration platform, that satisfy the highest standards for power density and energy efficiency of motors and generators. With more than 30 years of development, the company has grown into one of the World's top three motor and drive manufacturers and sales enterprises. Wolong insists on technological innovation to lead the industrial reform, actively supports business digital transformation, continuously develops efficient drive system solutions and creates smart industry brain for the motor and drive life cycle management.

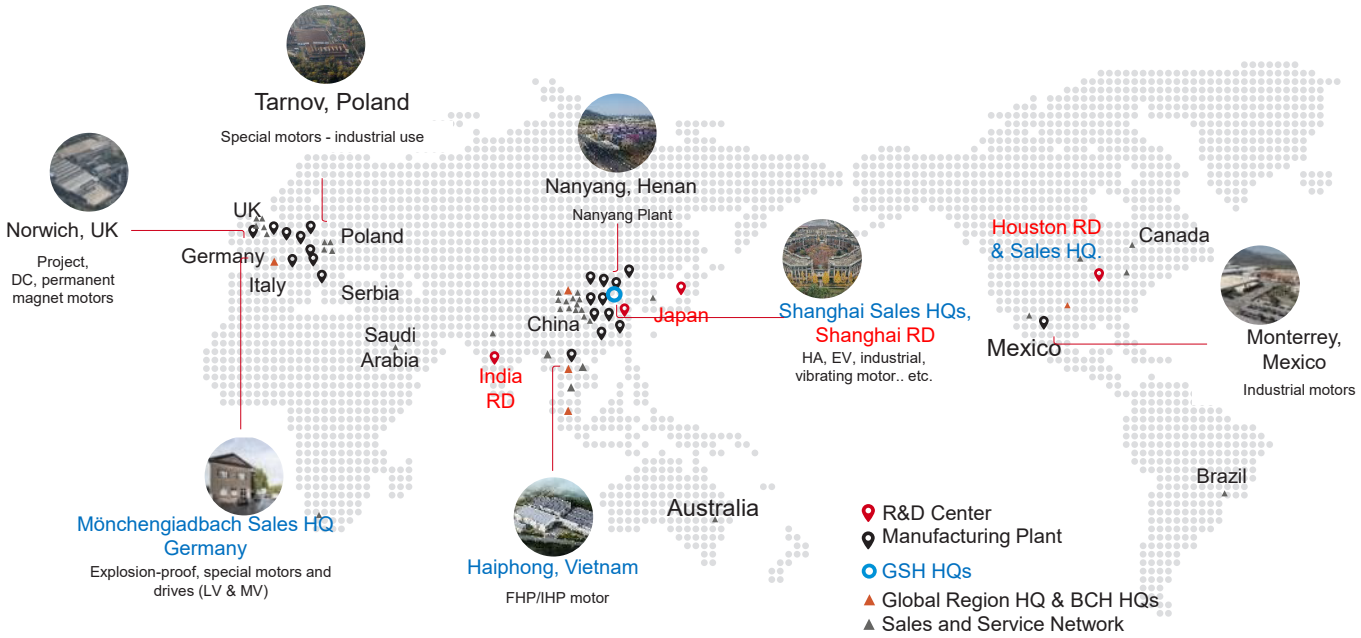

Product Overview

Product description

WEPM5&WEPM series variable frequency speed-regulating permanent magnet synchronous motor are ultra-efficient permanent magnet motors. They are designed with rare earth permanent magnet materials and their efficiency conforms IE5 to IE4 grade. It has higher efficiency and power density than the induction motor, and the frame size of the same power and torque output motor is smaller.

The motor adopts self-fan cooling design, can be driven in the frequency converter speed regulation operation without forced ventilation and cooling. It has low speed constant torque operation ability, wide speed range, high efficiency features with a full range. The mounting size of each frame is consistent with the induction motor, and in line with IEC and relevant national standards, convenient for customers to install and use.

The series motors are featured by beautiful appearance, high efficiency, low noise, low vibration, safety and reliability, and easy maintenance. Widely used in pumps, fans, air compressors, machine tools, reducers, packaging machinery, mining machinery, construction machinery and other types of transmission machinery industry.

WEPM5&WEPM series variable frequency speed-regulating permanent magnet synchronous motors can be matched with multiple brands of universal frequency converters. After long-term experiment, it has the best performance when matched with Wolong WD100 series high performance vector inverter.The motor supporting digital services, will be the motor and drive data collection, uploaded to Shun Zhiyun (iMotorLinx) industrial Internet platform, to achieve remote control of the system, state Monitoring and troubleshooting.

Nomenclature

WEPM X 5 - 132S - 22 - 3000

- 3000: Rated speed (r/min)
- 22: Rated power (kW)
- 132S: Frame size
- 5: Efficiency level:IE5(Default IE4)
- X: Housing material code (cast iron motor by default)
  - A- aluminum enclosure motor
- WEPM: Product code: Frequency Control Permanent Magnet Synchronous Motor

Aluminium motor
Flexible feet
Frame size 56~160

Cast iron motor
Fixed feet
Frame size 80~315

Specification

Efficiency level: IE5

	The motor features	
Item	Standard features	Optional (special)
Frame size	63~315	-
Rated power	0.18~315kW	-
Rated speed	3000 ,1500 ,1000r/min	-
Rated voltage	380V	400V or customization
Duty	S1	S2, S3 and so on
Mounting option	B3	B5, B35, V1 and so on
Insulation	F(Δ T 80K)	H
S.F	1	>1.0
Protection	IP55	IP56, IP65, IP66 and so on
Cooling mode	IC411	IC416
Frame material	Cast iron	Cast aluminium
Terminal box material	Cast aluminium	-
Terminal box position	Top	Right or left
Bearing lubrication	H180 and below --Maintenance-free bearings, H200 and above-- Open type bearing with oil injection and discharge device	
Thermal protection device	-	PTC, PTO, PT100, PT1000, Anti-condensation heater
Converter	Federal color code 33303	customization

Efficiency level: IE4

	The motor features	
Item	Standard features	Optional (special)
Frame size	56~315	-
Rated power	0.25~315kW	-
Rated speed	3000 ,1500 ,1000r/min	-
Rated voltage	380V	400V or customization
Duty	S1	S2, S3 and so on
Mounting option	B3	B5, B35, V1 and so on
Insulation	F(Δ T 80K)	H
S.F	1	>1.0
Protection	IP55	IP56, IP65, IP66 and so on
Cooling mode	IC411	IC416
Frame material	Cast iron	Cast aluminium
Terminal box material	Cast aluminium	-
Terminal box position	Top	Right or left
Bearing lubrication	H180 and below --Maintenance-free bearings, H200 and above-- Open type bearing with oil injection and discharge device	
Thermal protection device	-	PTC, PTO, PT100, PT1000, Anti-condensation heater
Converter	Federal color code 33303	customization

Note: The voltage is the input voltage when the motor drives the frequency converter to run.

Motor technology advantages

Advantage of WE platform

- WEPM5&WEPM series motors inherit the innovative features of the WE induction motor series uniformly designed by Wolong, with simple and elegant appearance, outstanding texture, high recognition and perfect combination of appearance and function.
- The shape of the terminal box with hexagonal elements increases the internal space and makes the electrical safety performance more reliable.
- H180 and below frame size can provide top lifting ring or horizontal side lifting ring; H200 and above frame size adopts double lifting ring, with high safety coefficient and large lifting margin;
- Adopting the optimal design of the blade and chassis taper, the overall optimization and simulation design of the cooling air circuit composed of the wind cover to realize the optimization of the cooling effect;
- The machine is compact in design, IEC standard in size, high interchange ability and flexible in outlet;

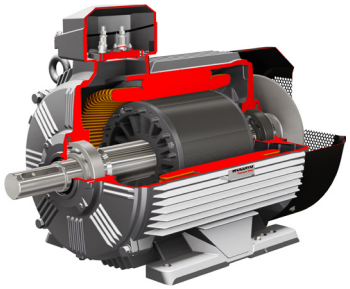

Lower noise

Compared with the induction motor, WEPM motor significantly reduces the loss, so the cooling fan used is smaller, which significantly reduces the noise of the motor, and the noise reduction effect can be up to 15 dB(A).

Output power (kW)	Frame			Noise dB(A)		
	WE3 (IE3)	WEPM (IE4)	WEPM5 (IE5)	WE3 (IE3) LwA	WEPM (IE4) LwA	WEPM5 (IE5) LwA
0.75	80M	56M	71M	62	61	62
1.1	80M	63M	71M	62	61	62
1.5	90S	63M	80M	67	61	62
2.2	90L	71M	80M	67	61	62
3	100L	80M	90S	74	62	67
4	112M	80M	90L	77	62	67
5.5	132S	90L	112M	79	67	77
7.5	132S	100L	112M	79	67	77
11	160M	100L	132S	81	74	79
15	160M	112M	132S	81	77	79
18.5	160L	112M	132M	81	77	79
22	180M	132S	132M	83	79	79
30	200L	132M	160M	84	79	81
37	200L	160M	160L	84	81	81
45	225M	160M	180M	86	81	83

Note: IE3 induction motor with 2 poles and permanent magnet synchronous motor with IE4&IE5 3000r/min are used for comparison

High power density advantage - Low volume and reduced weight

Permanent magnet synchronous motor with IE4&IE5 efficiency,compared with the same power and speed induction motor (IE3), the volume is reduced by 1-2 frame size, not only improve the motor efficiency, but also reduce the motor weight and volume. WEPM motors have shafts and bearings that can withstand higher power and torque in a smaller housing size.

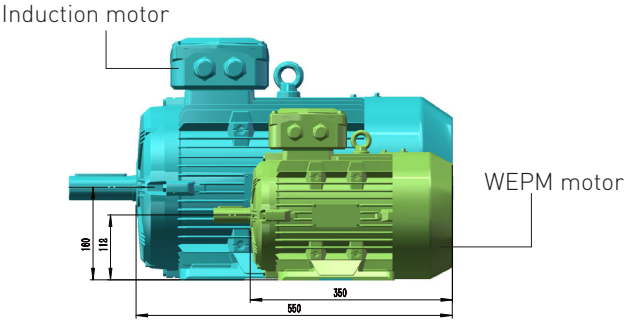

IE4 18.5kW 3000r/min WEPM VS IE3 18.5kW 2P induction motor

Maintain constant torque in a wide range of speed regulation

The motors can operate at constant torque over a wide range of rotational speeds, no need for forced ventilation. This feature makes it an ideal choice for applications that require variable speed and constant torque, even at low speeds, without the need for an encoder.

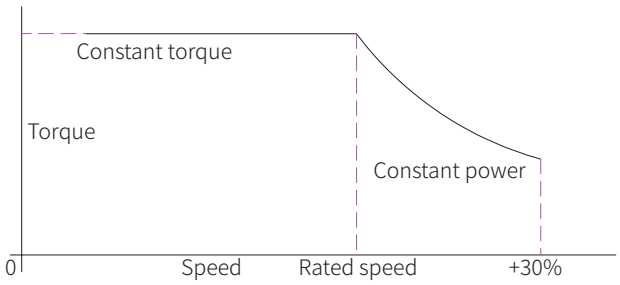

loss reduction

Compared with IE3 induction motor, the loss is greatly reduced

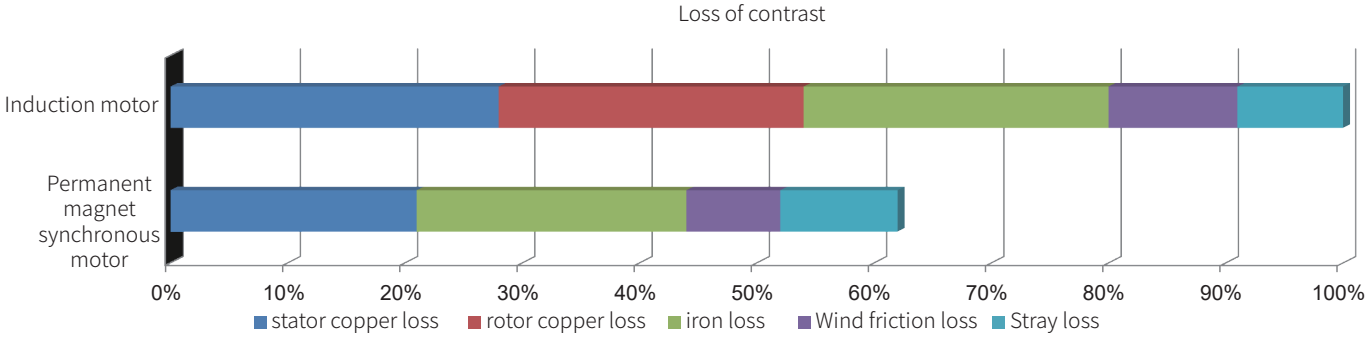

Loss comparison of IE3 induction motor and IE4 WEPM motor

The motor provides ultra-high efficiency at full range of speeds or loads

WEPM series permanent magnet synchronous motor rotor relies on permanent magnet to generate magnetic field, no need for reactive excitation current, can significantly improve the power factor (up to 1), regardless of speed or load, can provide ultra-high efficiency. It has superior efficiency compared with the induction motor in the full speed range, especially in the case of low speed or low torque output, the efficiency and power factor increase are more significant.

Efficiency and power factor curves under rated speed variable torque operation

Efficiency curve (permanent magnet motor and induction motor)

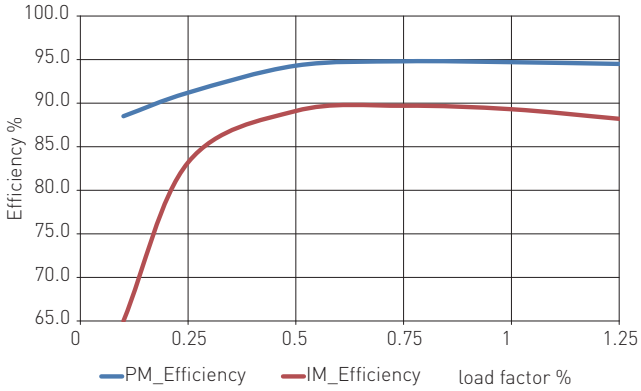

Power factor curve (permanent magnet motor and induction)

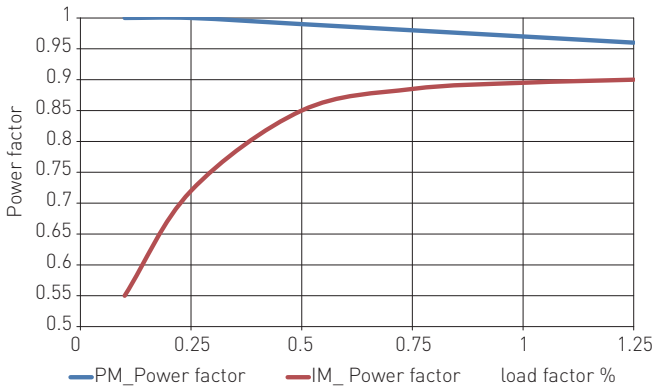

Efficiency and power factor curves of fan & pump under frequency conversion operation

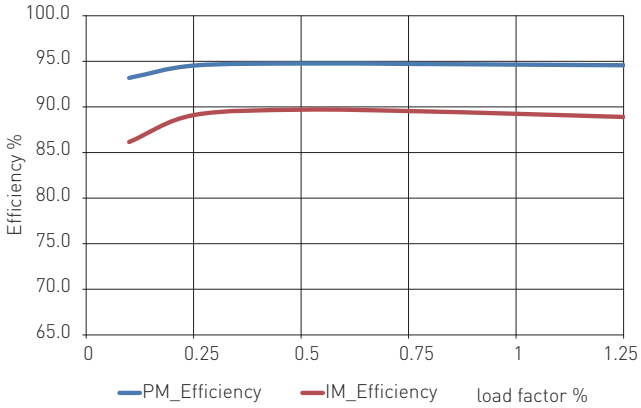

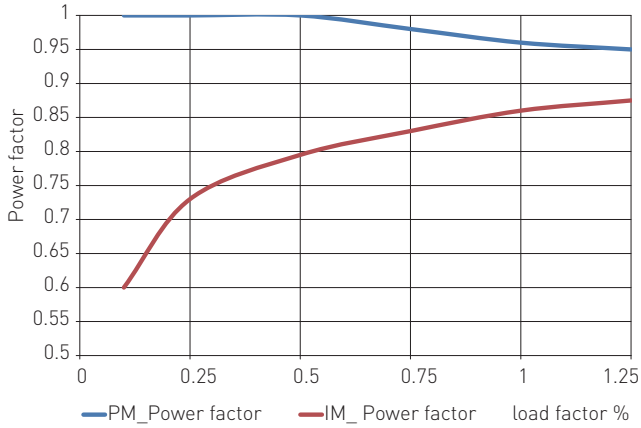

Performance Data

IE5 Performance data

WEPMA5-3000r/min IE5 Standard frame size Aluminum housing motor

Type	Rated power		Frame	Full-load torque Nm	pole	Frequency	380 V				Ke V/krpm	Noise		Moment of inertia kgm²×10⁻³	Weight kg
	kW	HP			P	Hz	Speed n min⁻¹	Full-load Efficiency %	Full-load P.F.	Rated current A		L_{WA} dB(A)	L_{PA} dB(A)		
WEPMA5-63M-0.25-3000	0.25	0.35	63M	0.8	4	100	3000	78.3	0.95	0.44	111	50	62	0.28	4.3
WEPMA5-71M-0.37-3000	0.37	0.5	71M	1.2	4	100	3000	81.7	0.95	0.72	109	50	62	0.46	5.6
WEPMA5-71M-0.55-3000	0.55	0.75	71M	1.8	4	100	3000	87.3	0.95	1.05	106	50	62	0.53	6.0
WEPMA5-80M-0.75-3000	0.75	1	80M	2.4	4	100	3000	88.6	0.95	1.33	111	50	62	1.12	8.4
WEPMA5-80M-1.1-3000	1.1	1.5	80M	3.5	4	100	3000	89.8	0.95	1.95	110	50	62	1.18	10.6
WEPMA5-90S-1.5-3000	1.5	2	90S	4.8	4	100	3000	90.9	0.95	2.8	105	55	67	2.08	12.7
WEPMA5-90L-2.2-3000	2.2	3	90L	7.0	4	100	3000	91.8	0.95	4.0	107	55	67	2.39	13.8
WEPMA5-100L-3-3000	3	4	100L	9.5	4	100	3000	92.6	0.95	5.8	109	62	74	5.56	18.4
WEPMA5-112M-4-3000	4	5.5	112M	12.7	4	100	3000	93.3	0.95	7.3	110	65	77	9.16	25.0
WEPMA5-132S-5.5-3000	5.5	7.5	132S	17.5	6	150	3000	94	0.95	10.0	112	67	79	42.3	29.1
WEPMA5-132S-7.5-3000	7.5	10	132S	23.9	6	150	3000	94.5	0.95	13.3	111	67	79	44.5	30.3
WEPMA5-160M-11-3000	11	15	160M	35.0	6	150	3000	95	0.95	19.5	114	68	81	53.8	50.3
WEPMA5-160M-15-3000	15	20	160M	48.0	6	150	3000	95.3	0.95	26.5	112	68	81	74.3	60.2
WEPMA5-160L-18.5-3000	18.5	25	160L	59.0	6	150	3000	95.6	0.95	33.0	114	68	81	78.4	63.5

Note: The above electrical parameters have taken into account the influence of inverter voltage drop, and the difference of inverter performance will bring some deviation, which is for reference only.

WEPM5-3000r/min IE5 Standard frame size Cast iron motor

Type	Rated power		Frame	Full-load torque Nm	pole	Frequency	380 V				Ke V/krpm	Noise		Moment of inertia kgm²×10⁻³	Weight kg
	kW	HP			P	Hz	Speed n min⁻¹	Full-load Efficiency %	Full-load P.F.	Rated current A		L_{WA} dB(A)	L_{PA} dB(A)		
WEPM5-80M-1.1-3000	1.1	1.5	80M	3.5	4	100	3000	89.8	0.95	1.95	110	50	62	1.18	16.3
WEPM5-90S-1.5-3000	1.5	2	90S	4.8	4	100	3000	90.9	0.95	2.8	105	55	67	2.08	20.1
WEPM5-90L-2.2-3000	2.2	3	90L	7.0	4	100	3000	91.8	0.95	4.0	107	55	67	2.39	22.0
WEPM5-100L-3-3000	3	4	100L	9.5	4	100	3000	92.6	0.95	5.8	109	62	74	5.56	30.0
WEPM5-112M-4-3000	4	5.5	112M	12.7	4	100	3000	93.3	0.95	7.3	110	65	77	9.16	38.7
WEPM5-132S-5.5-3000	5.5	7.5	132S	17.5	6	150	3000	94	0.95	10.0	112	67	79	42.3	48.1
WEPM5-132S-7.5-3000	7.5	10	132S	23.9	6	150	3000	94.5	0.95	13.3	111	67	79	44.5	49.3
WEPM5-160M-11-3000	11	15	160M	35.0	6	150	3000	95	0.95	19.5	114	68	81	53.8	83.3
WEPM5-160M-15-3000	15	20	160M	48.0	6	150	3000	95.3	0.95	26.5	112	68	81	74.3	93.2
WEPM5-160L-18.5-3000	18.5	25	160L	59.0	6	150	3000	95.6	0.95	33.0	114	68	81	78.4	100
WEPM5-180M-22-3000	22	30	180M	70	6	150	3000	95.9	0.95	39	115	70	83	121	122
WEPM5-200L-30-3000	30	41	200L	95.5	6	150	3000	96.1	0.95	53.0	110	71	84	218	189
WEPM5-200L-37-3000	37	50	200L	118	6	150	3000	96.3	0.95	65.0	108	71	84	256	200
WEPM5-225M-45-3000	45	61	225M	143	6	150	3000	96.4	0.95	82.0	115	73	86	425	246
WEPM5-250M-55-3000	55	75	250M	175	6	150	3000	96.5	0.95	92.0	117	75	89	639	333
WEPM5-280S-75-3000	75	102	280S	239	6	150	3000	96.6	0.95	127.0	108	77	91	873	422
WEPM5-280M-90-3000	90	123	280M	287	6	150	3000	96.7	0.95	152.0	111	77	91	1019	459
WEPM5-315S-110-3000	110	150	315S	350	6	150	3000	96.8	0.95	190.0	115	78	92	1463	765
WEPM5-315S-132-3000	132	180	315S	420	6	150	3000	96.9	0.95	228.0	110	78	92	1647	787
WEPM5-315L-160-3000	160	218	315L	510	6	150	3000	97	0.95	275.0	112	78	92	1894	852
WEPM5-315L-200-3000	200	272	315L	637	6	150	3000	97.2	0.95	342.0	108	78	92	2140	879

Note: The above electrical parameters have taken into account the influence of inverter voltage drop, and the difference of inverter performance will bring some deviation, which is for reference only.

WEPMA5-3000r/min IE5 Smaller frame size Aluminum housing motor

Type	Rated power		Frame	Full-load torque Nm	pole	Frequency	380 V				Ke V/krpm	Noise		Moment of inertia kgm²×10⁻³	Weight kg
	kW	HP			P	Hz	Speed n min⁻¹	Full-load Efficiency %	Full-load P.F.	Rated current A		L_{WA} dB(A)	L_{PA} dB(A)		
WEPMA5-63M-0.75-3000	0.75	1	63M	2.4	4	100	3000	88.6	0.95	1.35	112	50	62	0.53	5.4
WEPMA5-63M-1.1-3000	1.1	1.5	63M	3.5	4	100	3000	89.8	0.95	2	112	50	62	0.72	6.4
WEPMA5-71M-1.5-3000	1.5	2	71M	4.8	4	100	3000	90.9	0.95	2.64	116	50	62	1.38	9.5
WEPMA5-71M-2.2-3000	2.2	3	71M	7.0	4	100	3000	91.8	0.95	3.88	114	50	62	1.53	10.2
WEPMA5-80M-3-3000	3	4	80M	9.5	4	100	3000	92.6	0.95	5.4	112	50	62	3.84	16.3
WEPMA5-90L-4-3000	4	5.5	90L	12.7	4	100	3000	93.3	0.95	7.2	111	55	67	4.16	20.5
WEPMA5-90L-5.5-3000	5.5	7.5	90L	17.5	4	100	3000	94	0.95	9.8	111	55	67	4.85	22.6
WEPMA5-100L-7.5-3000	7.5	10	100L	23.9	4	100	3000	94.5	0.95	13.5	111	62	74	11.1	26.1
WEPMA5-100L-11-3000	11	15	100L	35.0	4	100	3000	95	0.95	20	109	62	74	13.9	30.5
WEPMA5-112M-15-3000	15	20	112M	47.7	4	100	3000	95.3	0.95	26	114	65	77	22.2	44.1
WEP-MA5-112M-18.5-3000	18.5	25	112M	58.9	4	100	3000	95.6	0.95	32.2	114	65	77	22.2	44.1
WEPMA5-132M-22-3000	22	30	132M	70.0	6	150	3000	95.9	0.95	38.1	112	67	79	98.8	46.9
WEPMA5-160M-30-3000	30	40	160M	95.5	6	150	3000	96.1	0.95	52.2	111	68	81	116.5	71.9
WEPMA5-160M-37-3000	37	50	160M	117.8	6	150	3000	96.3	0.95	64.5	110	68	81	134.4	79.3
WEPMA5-160L-45-3000	45	60	160L	143.2	6	150	3000	96.4	0.95	78.5	110	68	81	170.2	93.2

Note: The above electrical parameters have taken into account the influence of inverter voltage drop, and the difference of inverter performance will bring some deviation, which is for reference only.

WEPM5-3000r/min IE5 Smaller frame size Cast iron motor

Type	Rated power		Frame	Full-load torque Nm	pole	Frequency	380 V				Ke V/krpm	Noise		Moment of inertia kgm²×10⁻³	Weight kg
	kW	HP			P	Hz	Speed n min⁻¹	Full-load Efficiency %	Full-load P.F.	Rated current A		L_{WA} dB(A)	L_{PA} dB(A)		
WEPM5-80M-3-3000	3	4	80M	9.5	4	100	3000	92.6	0.95	5.4	112	50	62	3.84	19.6
WEPM5-90L-4-3000	4	5.5	90L	12.7	4	100	3000	93.3	0.95	7.2	111	55	67	4.16	25.8
WEPM5-90L-5.5-3000	5.5	7.5	90L	17.5	4	100	3000	94	0.95	9.8	111	55	67	4.85	27.9
WEPM5-100L-7.5-3000	7.5	10	100L	23.9	4	100	3000	94.5	0.95	13.5	111	62	74	11.1	35.5
WEPM5-100L-11-3000	11	15	100L	35.0	4	100	3000	95	0.95	20	109	62	74	13.9	39.8
WEPM5-112M-15-3000	15	20	112M	47.7	4	100	3000	95.3	0.95	26	114	65	77	22.2	51.7
WEPM5-112M-18.5-3000	18.5	25	112M	58.9	4	100	3000	95.6	0.95	32.2	114	65	77	22.2	51.7
WEPM5-132M-22-3000	22	30	132M	70.0	6	150	3000	95.9	0.95	38.1	112	67	79	98.8	60.6
WEPM5-160M-30-3000	30	40	160M	95.5	6	150	3000	96.1	0.95	52.2	111	68	81	116.5	100.3
WEPM5-160M-37-3000	37	50	160M	117.8	6	150	3000	96.3	0.95	64.5	110	68	81	134.4	107.7
WEPM5-160L-45-3000	45	60	160L	143.2	6	150	3000	96.4	0.95	78.5	110	68	81	170.2	125.2
WEPM5-180M-55-3000	55	75	180M	175.1	6	150	3000	96.5	0.95	93	116	70	83	214.2	150.1
WEPM5-180L-75-3000	75	100	180L	238.7	6	150	3000	96.6	0.95	132	111	70	83	307.9	183.6
WEPM5-200L-90-3000	90	125	200L	286.5	6	150	3000	96.7	0.95	155	112	71	84	458.4	235.2
WEPM5-200L-110-3000	110	150	200L	350.1	6	150	3000	96.8	0.95	188	112	71	84	523.9	250.8
WEPM5-225M-132-3000	132	175	225M	420.2	6	150	3000	96.9	0.95	222	117	73	86	992.4	316.2
WEPM5-250M-160-3000	160	220	250M	509.3	6	150	3000	97	0.95	270	115	75	89	1748.8	437.7
WEPM5-280S-185-3000	185	250	280S	588.9	6	150	3000	97	0.95	311	115	77	91	1964.3	538.7
WEPM5-280S-200-3000	200	270	280S	636.6	6	150	3000	97.2	0.95	335	115	77	91	1964.3	538.7
WEPM5-280S-220-3000	220	300	280S	700.3	6	150	3000	97.2	0.95	366	115	77	91	2619.0	631.3
WEPM5-280M-250-3000	250	340	280M	795.8	6	150	3000	97.2	0.95	418	115	77	91	2619.0	631.3
WEPM5-315S-280-3000	280	380	315S	891.2	6	150	3000	97.2	0.95	495	106	78	92	3291.8	886.9
WEPM5-315S-315-3000	315	430	315S	1002.6	6	150	3000	97.2	0.95	555	103	78	92	3803.8	935.8

Note: The above electrical parameters have taken into account the influence of inverter voltage drop, and the difference of inverter performance will bring some deviation, which is for reference only.

WEPMA5-1500r/min IE5 Standard frame size Aluminum housing motor

Type	Rated power		Frame	Full-load torque Nm	pole	Frequency	380 V				Ke V/krpm	Noise		Moment of inertia kgm²×10⁻³	Weight kg
	kW	HP			P	Hz	Speed n min⁻¹	Full-load Efficiency %	Full-load P.F.	Rated current A		L_{WA} dB(A)	L_{PA} dB(A)		
WEPMA5-63M-0.12-1500	0.12	0.17	63M	0.8	4	50	1500	74.3	0.95	0.22	194	43	55	1.31	3.9
WEPMA5-63M-0.18-1500	0.18	0.25	63M	1.2	4	50	1500	78.7	0.95	0.32	203	43	55	1.57	4.2
WEPMA5-71M-0.25-1500	0.25	0.35	71M	1.6	4	50	1500	81.5	0.95	0.48	203	43	55	0.53	6.0
WEPMA5-71M-037-1500	0.37	0.5	71M	2.4	4	50	1500	84.3	0.95	0.71	213	43	55	0.86	7.7
WEPMA5-80M-0.55-1500	0.55	0.75	80M	3.5	4	50	1500	86.7	0.95	1.0	220	44	56	1.18	10.6
WEPMA5-80M-0.75-1500	0.75	1	80M	4.8	4	50	1500	88.2	0.95	1.3	220	44	56	1.87	11.4
WEPMA5-90S-1.1-1500	1.1	1.5	90S	7.0	4	50	1500	89.5	0.95	2.2	203	47	59	2.23	13.3
WEPMA5-90L-1.5-1500	1.5	2	90L	9.6	4	50	1500	90.4	0.95	2.9	209	47	59	2.99	14.9
WEPMA5-100L-2.2-1500	2.2	3	100L	14.0	4	50	1500	91.4	0.95	4.1	219	52	64	7.97	22.5
WEPMA5-100L-3-1500	3	4	100L	19.1	4	50	1500	92.1	0.95	5.5	220	52	64	10.4	26.9
WEPMA5-112M-4-1500	4	5.5	112M	25.5	4	50	1500	92.8	0.95	7.4	218	53	65	14.4	33.3
WEPMA5-132S-5.5-1500	5.5	7.5	132S	38.0	6	75	1500	93.4	0.95	10.2	213	59	71	59.9	37.7
WEPMA5-132M-7.5-1500	7.5	10	132M	47.8	6	75	1500	94	0.95	13.5	219	59	71	78.9	47.5
WEPMA5-160M-11-1500	11	15	160M	70.0	6	75	1500	94.6	0.95	19.1	222	60	73	84.6	65.2
WEPMA5-160L-15-1500	15	20	160L	95.5	6	75	1500	95.1	0.95	26.0	222	60	73	109	78.4

Note: The above electrical parameters have taken into account the influence of inverter voltage drop, and the difference of inverter performance will bring some deviation, which is for reference only.

WEPM5-1500r/min IE5 Standard frame size Cast iron motor

Type	Rated power		Frame	Full-load torque Nm	pole	Frequency	380 V				Ke V/krpm	Noise		Moment of inertia kgm²×10⁻³	Weight kg
	kW	HP			P	Hz	Speed n min⁻¹	Full-load Efficiency %	Full-load P.F.	Rated current A		L_{WA} dB(A)	L_{PA} dB(A)		
WEPM5-80M-0.55-1500	0.55	0.75	80M	3.5	4	50	1500	86.7	0.95	1.0	220	44	56	1.18	16.3
WEPM5-80M-0.75-1500	0.75	1	80M	4.8	4	50	1500	88.2	0.95	1.3	220	44	56	1.87	17.2
WEPM5-90S-1.1-1500	1.1	1.5	90S	7.0	4	50	1500	89.5	0.95	2.2	203	47	59	2.23	20.7
WEPM5-90L-1.5-1500	1.5	2	90L	9.6	4	50	1500	90.4	0.95	2.9	209	47	59	2.99	23.1
WEPM5-100L-2.2-1500	2.2	3	100L	14.0	4	50	1500	91.4	0.95	4.1	219	52	64	7.97	34.2
WEPM5-100L-3-1500	3	4	100L	19.1	4	50	1500	92.1	0.95	5.5	220	52	64	10.4	38.6
WEPM5-112M-4-1500	4	5.5	112M	25.5	4	50	1500	92.8	0.95	7.4	218	53	65	14.4	47.0
WEPM5-132S-5.5-1500	5.5	7.5	132S	38.0	6	75	1500	93.4	0.95	10.2	213	59	71	59.9	56.7
WEPM5-132M-7.5-1500	7.5	10	132M	47.8	6	75	1500	94	0.95	13.5	219	59	71	78.9	68.4
WEPM5-160M-11-1500	11	15	160M	70.0	6	75	1500	94.6	0.95	19.1	222	60	73	84.6	98.1
WEPM5-160L-15-1500	15	20	160L	95.5	6	75	1500	95.1	0.95	26.0	222	60	73	109	115
WEPM5-180M-18.5-1500	18.5	25	180M	118.0	8	100	1500	95.3	0.95	31.5	212	63	76	153	130
WEPM5-180L-22-1500	22	30	180L	140.0	8	100	1500	95.5	0.95	38	223	63	76	182	146
WEPM5-200L-30-1500	30	41	200L	191.0	8	100	1500	95.9	0.95	50.5	218	63	76	331	219
WEPM5-225S-37-1500	37	50	225S	236.0	6	75	1500	96.1	0.95	63	220	65	78	545	264
WEPM5-225M-45-1500	45	61	225M	287.0	6	75	1500	96.3	0.95	76	216	65	78	724	302
WEPM5-250M-55-1500	55	75	250M	350.0	6	75	1500	96.5	0.95	93	225	65	79	996	654
WEPM5-280S-75-1500	75	102	280S	478.0	6	75	1500	96.7	0.95	127	222	66	80	1572	485
WEPM5-280M-90-1500	90	123	280M	573.0	6	75	1500	96.9	0.95	151	222	66	80	1787	575
WEPM5-315S-110-1500	110	150	315S	700.0	6	75	1500	97	0.95	197	220	74	88	2509	890
WEPM5-315M-132-1500	132	180	315M	841.0	6	75	1500	97.1	0.95	240	216	74	88	3002	983
WEPM5-315L-160-1500	160	218	315L	1019.0	6	75	1500	97.2	0.95	286	222	74	88	3864	1083
WEPM5-315L-200-1500	200	272	315L	1273.0	6	75	1500	97.4	0.95	356	218	74	88	4480	1154

Note: The above electrical parameters have taken into account the influence of inverter voltage drop, and the difference of inverter performance will bring some deviation, which is for reference only.

WEPMA5-1500r/min IE5 Smaller frame size Aluminum housing motor

Type	Rated power		Frame	Full-load torque Nm	pole	Frequency	380 V				Ke V/krpm	Noise		Moment of inertia kgm²×10⁻³	Weight kg
	kW	HP			P	Hz	Speed n min⁻¹	Full-load Efficiency %	Full-load P.F.	Rated current A		L_{WA} dB(A)	L_{PA} dB(A)		
WEPMA5-63M-0.4-1500	0.4	0.55	63M	2.5	4	50	1500	84.8	0.95	0.76	212	43	55	0.58	5.6
WEPMA5-63M-0.55-1500	0.55	0.75	63M	3.5	4	50	1500	86.7	0.95	1.03	229	43	55	0.72	6.4
WEPMA5-71M-0.75-1500	0.75	1	71M	4.8	4	50	1500	88.2	0.95	1.38	219	43	55	1.38	9.5
WEPMA5-71M-1.1-1500	1.1	1.5	71M	7.0	4	50	1500	89.5	0.95	2.02	217	43	55	1.53	10.2
WEPMA5-80M-1.5-1500	1.5	2	80M	9.5	4	50	1500	90.4	0.95	2.7	224	44	56	3.84	16.3
WEPMA5-90L-2.2-1500	2.2	3	90L	14.0	4	50	1500	91.4	0.95	3.97	221	47	59	4.85	22.6
WEPMA5-90L-3-1500	3	4	90L	19.1	4	50	1500	92.1	0.95	5.6	208	47	59	4.85	22.6
WEPMA5-100L-4-1500	4	5.5	100L	25.5	4	50	1500	92.8	0.95	7.1	223	52	64	11.1	26.2
WEPMA5-100L-5.5-1500	5.5	7.5	100L	35.0	4	50	1500	93.4	0.95	9.7	223	52	64	14.8	32.0
WEPMA5-112M-7.5-1500	7.5	10	112M	47.7	4	50	1500	94	0.95	13.4	221	53	65	22.2	44.1
WEPMA5-132M-11-1500	11	15	132M	70.0	6	75	1500	94.6	0.95	19.2	224	59	71	105.9	49.0
WEPMA5-160M-15-1500	15	20	160M	95.5	6	75	1500	95.1	0.95	26.8	214	60	73	107.5	68.4
WEP-MA5-160M-18.5-1500	18.5	25	160M	117.8	6	75	1500	95.3	0.95	33.3	210	60	73	122.4	73.2
WEPMA5-160M-22-1500	22	30	160M	140.1	6	75	1500	95.5	0.95	39.8	209	60	73	134.4	78.3

Note: The above electrical parameters have taken into account the influence of inverter voltage drop, and the difference of inverter performance will bring some deviation, which is for reference only.

WEPM5-1500r/min IE5 Smaller frame size Cast iron motor

Type	Rated power		Frame	Full-load torque Nm	pole	Frequency	380 V				Ke V/krpm	Noise		Moment of inertia kgm²×10⁻³	Weight kg
	kW	HP			P	Hz	Speed n min⁻¹	Full-load Efficiency %	Full-load P.F.	Rated current A		L_{WA} dB(A)	L_{PA} dB(A)		
WEPM5-80M-1.5-1500	1.5	2	80M	9.5	4	50	1500	90.4	0.95	2.7	224	44	56	3.84	19.6
WEPM5-90L-2.2-1500	2.2	3	90L	14.0	4	50	1500	91.4	0.95	4	221	47	59	4.85	27.9
WEPM5-90L-3-1500	3	4	90L	19.1	4	50	1500	92.1	0.95	5.6	208	47	59	4.85	27.9
WEPM5-100L-4-1500	4	5.5	100L	25.5	4	50	1500	92.8	0.95	7.1	223	52	64	11.1	35.6
WEPM5-100L-5.5-1500	5.5	7.5	100L	35.0	4	50	1500	93.4	0.95	9.7	223	52	64	14.8	41.3
WEPM5-112M-7.5-1500	7.5	10	112M	47.7	4	50	1500	94	0.95	13.4	221	53	65	22.2	51.7
WEPM5-132M-11-1500	11	15	132M	70.0	6	75	1500	94.6	0.95	19.2	224	59	71	105.9	62.7
WEPM5-160M-15-1500	15	20	160M	95.5	6	75	1500	95.1	0.95	26.8	214	60	73	107.5	73.2
WEPM5-160M-18.5-1500	18.5	25	160M	117.8	6	75	1500	95.3	0.95	33.3	210	60	73	122.4	96.9
WEPM5-160M-22-1500	22	30	160M	140.1	6	75	1500	95.5	0.95	39.8	209	60	73	134.4	106.7
WEPM5-180M-30-1500	30	40	180M	191.0	8	100	1500	95.9	0.95	52	228	63	76	244.8	143.8
WEPM5-180M-37-1500	37	50	180M	235.5	8	100	1500	96.1	0.95	66	218	63	76	267.8	150.4
WEPM5-180L-45-1500	45	60	180L	286.5	8	100	1500	96.3	0.95	78	225	63	76	351.9	177.1
WEPM5-200L-55-1500	55	75	200L	350.1	6	75	1500	96.5	0.95	98	209	63	76	491.2	243.0
WEPM5-225M-75-1500	75	100	225M	477.5	6	75	1500	96.7	0.95	129	229	65	78	972.1	314.8
WEPM5-250M-90-1500	90	125	250M	572.9	6	75	1500	96.9	0.95	154	223	65	79	1513.4	408.3
WEPM5-280S-110-1500	110	150	280S	700.3	6	75	1500	97	0.95	188	224	66	80	2182.5	577.6
WEPM5-280S-132-1500	132	175	280S	840.3	6	75	1500	97.1	0.95	225	223	66	80	2531.7	619.1
WEPM5-280M-160-1500	160	220	280M	1018.6	6	75	1500	97.2	0.95	285	212	66	80	2880.9	667.8
WEPM5-315M-185-1500	185	250	315M	1177.7	6	75	1500	97.4	0.95	330	204	74	88	4901.1	1076.5
WEPM5-315M-200-1500	200	270	315M	1273.2	6	75	1500	97.4	0.95	356	204	74	88	5486.3	1132.1
WEPM5-315M-220-1500	220	297	315M	1400.5	6	75	1500	97.4	0.95	392	204	74	88	5486.3	1132.1
WEPM5-315L-250-1500	250	340	315L	1591.5	6	75	1500	97.4	0.95	450	201	74	88	6217.8	1211.9
WEPM5-315L-280-1500	280	380	315L	1782.5	6	75	1500	97.4	0.95	500	201	74	88	6217.8	1211.9
WEPM5-315L-315-1500	315	430	315L	2005.3	6	75	1500	97.4	0.95	557	204	74	88	7315.0	1316.7

Note: The above electrical parameters have taken into account the influence of inverter voltage drop, and the difference of inverter performance will bring some deviation, which is for reference only.

WEPMA5-1000r/min IE5 Standard frame size Aluminum housing motor

Type	Rated power		Frame	Full-load torque Nm	pole	Frequency	380 V				Ke V/krpm	Noise		Moment of inertia kgm²×10⁻³	Weight kg
	kW	HP			P	Hz	Speed n min⁻¹	Full-load Efficiency %	Full-load P.F.	Rated current A		L_{WA} dB(A)	L_{PA} dB(A)		
WEPMA5-71M-0.18-1000	0.18	0.25	71M	1.7	4	33.3	1000	74.6	0.95	0.36	292	40	52	0.53	6.0
WEPMA5-71M-0.25-1000	0.25	0.35	71M	2.4	4	33.3	1000	78.1	0.95	0.50	315	40	52	0.86	7.7
WEPMA5-80M-0.37-1000	0.37	0.5	80M	3.5	4	33.3	1000	81.6	0.95	0.7	308	42	54	1.18	10.6
WEPMA5-80M-0.55-1000	0.55	0.75	80M	5.3	4	33.3	1000	85.9	0.95	1.1	303	42	54	1.87	11.4
WEPMA5-90S-0.75-1000	0.75	1	90S	7.2	4	33.3	1000	87.4	0.95	1.5	305	45	57	2.12	13.8
WEPMA5-90L-1.1-1000	1.1	1.5	90L	10.5	4	33.3	1000	88.7	0.95	2.2	307	45	57	3.45	16.4
WEPMA5-100L-1.5-1000	1.5	2	100L	14.3	4	33.3	1000	89.9	0.95	2.9	321	49	61	8.77	24.0
WEPMA5-112M-2.2-1000	2.2	3	112M	21.0	4	33.3	1000	90.9	0.95	4.1	327	53	65	12.9	31.0
WEPMA5-132S-3-1000	3	4	132S	28.7	4	33.3	1000	91.8	0.95	5.5	318	57	69	55.5	35.7
WEPMA5-132M-4-1000	4	5.5	132M	38.2	6	50	1000	92.7	0.95	7.3	322	57	69	70.1	43.1
WEPMA5-132M-5.5-1000	5.5	7.5	132M	47.8	6	50	1000	93.4	0.95	10.0	322	57	69	87.7	51.5
WEPMA5-160M-7.5-1000	7.5	10	160M	71.7	6	50	1000	94	0.95	13.5	327	60	73	84.6	64.9
WEPMA5-160L-11-1000	11	15	160L	105.0	6	50	1000	94.5	0.95	19.8	338	60	73	116	81.5

Note: The above electrical parameters have taken into account the influence of inverter voltage drop, and the difference of inverter performance will bring some deviation, which is for reference only.

WEPM5-1000r/min IE5 Standard frame size Cast iron motor

Type	Rated power		Frame	Full-load torque Nm	pole	Frequency	380 V				Ke V/krpm	Noise		Moment of inertia kgm²×10⁻³	Weight kg
	kW	HP			P	Hz	Speed n min⁻¹	Full-load Efficiency %	Full-load P.F.	Rated current A		L_{WA} dB(A)	L_{PA} dB(A)		
WEPM5-80M-0.37-1000	0.37	0.5	80M	3.5	4	33.3	1000	81.6	0.95	0.7	308	42	54	1	16.3
WEPM5-80M-0.55-1000	0.55	0.75	80M	5.3	4	33.3	1000	85.9	0.95	1.1	303	42	54	2	17.2
WEPM5-90S-0.75-1000	0.75	1	90S	7.2	4	33.3	1000	87.4	0.95	1.5	305	45	57	2	21.2
WEPM5-90L-1.1-1000	1.1	1.5	90L	10.5	4	33.3	1000	88.7	0.95	2.2	307	45	57	3	24.6
WEPM5-100L-1.5-1000	1.5	2	100L	14.3	4	33.3	1000	89.9	0.95	2.9	321	49	61	9	35.7
WEPM5-112M-2.2-1000	2.2	3	112M	21.0	4	33.3	1000	90.9	0.95	4.1	327	53	65	13	44.7
WEPM5-132S-3-1000	3	4	132S	28.7	4	33.3	1000	91.8	0.95	5.5	318	57	69	56	54.7
WEPM5A-132M-4-1000	4	5.5	132M	38.2	6	50	1000	92.7	0.95	7.3	322	57	69	70	64.0
WEPM5A-132M-5.5-1000	5.5	7.5	132M	47.8	6	50	1000	93.4	0.95	10.0	322	57	69	88	72.5
WEPM5-160M-7.5-1000	7.5	10	160M	71.7	6	50	1000	94	0.95	13.5	327	60	73	85	97.9
WEPM5-160L-11-1000	11	15	160L	105.0	6	50	1000	94.5	0.95	19.8	338	60	73	116	118
WEPM5-180L-15-1000	15	20	180L	143.0	8	66.7	1000	94.9	0.95	26.5	336	60	73	183	146
WEPM5-200L-18.5-1000	18.5	25	200L	177.0	8	66.7	1000	95.3	0.95	33	324	60	73	341	222
WEPM5-200L-22-1000	22	30	200L	210.0	8	66.7	1000	95.6	0.95	38	322	60	73	444	251
WEPM5-225M-30-1000	30	41	225M	287.0	8	66.7	1000	95.8	0.95	54	326	61	74	654	290
WEPM5-250M-37-1000	37	50	250M	354.0	8	66.7	1000	96	0.95	64	324	62	76	1038	394
WEPM5-280S-45-1000	45	61	280S	430.0	8	66.7	1000	96.2	0.95	78	317	64	78	1292	484
WEPM5-280M-55-1000	55	75	280M	525.0	8	66.7	1000	96.3	0.95	96	321	64	78	1508	532
WEPM5-315S-75-1000	75	102	315S	716.0	8	66.7	1000	96.4	0.95	131	320	69	83	2140	835
WEPM5-315M-90-1000	90	123	315M	890.0	8	66.7	1000	96.5	0.95	156	315	69	83	2509	912
WEPM5-315L-110-1000	110	150	315L	1051.0	8	66.7	1000	96.6	0.95	197	316	69	83	3002	966
WEPM5-315L-132-1000	132	180	315L	1261	8	66.7	1000	96.8	0.95	235	311	69	83	3618	1032

Note: The above electrical parameters have taken into account the influence of inverter voltage drop, and the difference of inverter performance will bring some deviation, which is for reference only.

WEPMA5-1000r/min IE5 Smaller frame size Aluminum housing motor

Type	Rated power		Frame	Full-load torque Nm	pole	Frequency	380 V				Ke V/krpm	Noise		Moment of inertia kgm²×10⁻³	Weight kg
	kW	HP			P	Hz	Speed n min⁻¹	Full-load Efficiency %	Full-load P.F.	Rated current A		L_{WA} dB(A)	L_{PA} dB(A)		
WEPMA5-63M-0.25-1000	0.25	0.35	63M	2.4	4	33.3	1000	78.1	0.95	0.53	289	40	52	0.48	5.1
WEPMA5-63M-0.37-1000	0.37	0.5	63M	3.5	4	33.3	1000	81.6	0.95	0.75	299	40	52	0.72	6.4
WEPMA5-71M-0.4-1000	0.4	0.55	71M	3.8	4	33.3	1000	82.2	0.95	0.79	307	40	52	1.07	8.1
WEPMA5-71M-0.55-1000	0.55	0.75	71M	5.3	4	33.3	1000	85.9	0.95	1.05	322	40	52	1.53	10.1
WEPMA5-80M-0.75-1000	0.75	1	80M	7.2	4	33.3	1000	87.4	0.95	1.35	331	42	54	3.84	16.3
WEPMA5-90L-1.1-1000	1.1	1.5	90L	10.5	4	33.3	1000	88.7	0.95	2.03	326	45	57	4.51	21.5
WEPMA5-100L-1.5-1000	1.5	2	100L	14.3	4	33.3	1000	89.9	0.95	2.7	342	49	61	9.73	23.9
WEPMA5-100L-2.2-1000	2.2	3	100L	21.0	4	33.3	1000	90.9	0.95	4	326	49	61	13.0	29.2
WEPMA5-112M-3-1000	3	4	112M	28.6	4	33.3	1000	91.8	0.95	5.35	340	53	65	19.6	40.9
WEPMA5-132S-4-1000	4	5.5	132S	38.2	6	50	1000	92.7	0.95	7	338	57	69	84.7	41.3
WEPMA5-132M-5.5-1000	5.5	7.5	132M	52.5	6	50	1000	93.4	0.95	9.6	340	57	69	112.9	50.9
WEPMA5-132M-7.5-1000	7.5	10	132M	71.6	6	50	1000	94	0.95	12.9	341	57	69	134.1	57.5
WEPMA5-160M-11-1000	11	15	160M	105.0	6	50	1000	94.5	0.95	19.7	322	60	73	143.3	81.7
WEPMA5-160L-15-1000	15	20	160L	143.2	6	50	1000	94.9	0.95	26.5	325	60	73	192.6	101.3

Note: The above electrical parameters have taken into account the influence of inverter voltage drop, and the difference of inverter performance will bring some deviation, which is for reference only.

WEPM5-1000r/min IE5 Smaller frame size Cast iron motor

Type	Rated power		Frame	Full-load torque Nm	pole	Frequency	380 V				Ke V/krpm	Noise		Moment of inertia kgm²×10⁻³	Weight kg
	kW	HP			P	Hz	Speed n min⁻¹	Full-load Efficiency %	Full-load P.F.	Rated current A		L_{WA} dB(A)	L_{PA} dB(A)		
WEPM5-80M-0.75-1000	0.75	1	80M	7.2	4	33.3	1000	87.4	0.95	1.35	331	42	54	3.84	19.5
WEPM5-90L-1.1-1000	1.1	1.5	90L	10.5	4	33.3	1000	88.7	0.95	2.03	326	45	57	4.51	26.8
WEPM5-100L-1.5-1000	1.5	2	100L	14.3	4	33.3	1000	89.9	0.95	2.7	342	49	61	9.73	33.2
WEPM5-100L-2.2-1000	2.2	3	100L	21.0	4	33.3	1000	90.9	0.95	4	326	49	61	13.0	38.5
WEPM5-112M-3-1000	3	4	112M	28.6	4	33.3	1000	91.8	0.95	5.35	340	53	65	19.6	48.5
WEPM5-132S-4-1000	4	5.5	132S	38.2	6	50	1000	92.7	0.95	7	338	57	69	84.7	53.1
WEPM5-132M-5.5-1000	5.5	7.5	132M	52.5	6	50	1000	93.4	0.95	9.6	340	57	69	112.9	64.6
WEPM5-132M-7.5-1000	7.5	10	132M	71.6	6	50	1000	94	0.95	12.9	341	57	69	134.1	71.2
WEPM5-160M-11-1000	11	15	160M	105.0	6	50	1000	94.5	0.95	19.7	322	60	73	143.3	110.1
WEPM5-160L-15-1000	15	20	160L	143.2	6	50	1000	94.9	0.95	26.5	325	60	73	192.6	133.2
WEPM5-180M-18.5-1000	18.5	25	180M	176.7	8	66.7	1000	95.3	0.95	32.5	336	60	73	275.4	151.7
WEPM5-180L-22-1000	22	30	180L	210.1	8	66.7	1000	95.6	0.95	38.5	336	60	73	321.3	169.1
WEPM5-180L-30-1000	30	40	180L	286.5	8	66.7	1000	95.8	0.95	51.5	342	60	73	367.2	181.1
WEPM5-200L-37-1000	37	50	200L	353.3	8	66.7	1000	96	0.95	64	333	60	73	523.9	250
WEPM5-225M-45-1000	45	60	225M	429.7	8	66.7	1000	96.2	0.95	78	335	61	74	1000.2	321.7
WEPM5-250M-55-1000	55	75	250M	525.2	6	50	1000	96.3	0.95	97	322	62	76	1311.6	383.9
WEPM5-250M-75-1000	75	100	250M	716.2	6	50	1000	96.4	0.95	132	324	62	76	1647.9	426.2
WEPM5-280S-90-1000	90	125	280S	859.4	8	66.7	1000	96.5	0.95	159	313	64	78	1938.0	545.9
WEPM5-280S-110-1000	110	150	280S	1050.4	8	66.7	1000	96.6	0.95	192	315	64	78	2341.8	593.8
WEPM5-280M-132-1000	132	175	280M	1260.5	8	66.7	1000	96.8	0.95	226	322	64	78	2664.8	660.5
WEPM5-315M-160-1000	160	220	315M	1527.8	8	66.7	1000	96.9	0.95	288	301	69	83	3682.6	973.5
WEPM5-315M-185-1000	185	250	315M	1766.6	8	66.7	1000	96.9	0.95	334	301	69	83	4134.9	1017.4
WEPM5-315L-200-1000	200	270	315L	1909.8	8	66.7	1000	97	0.95	362	300	69	83	4716.3	1084.3
WEPM5-315L-220-1000	220	300	315L	2100.8	8	66.7	1000	97	0.95	395	303	69	83	5556.2	1167.8
WEPM5-315L-250-1000	250	340	315L	2387.3	8	66.7	1000	97	0.95	446	303	69	83	5556.2	1167.8

Note: The above electrical parameters have taken into account the influence of inverter voltage drop, and the difference of inverter performance will bring some deviation, which is for reference only.

IE4 Performance data

WEPMA-3000r/min IE4 Aluminum housing motor

Type	Rated power		Frame	Full-load torque Nm	pole	Frequency	380 V				Ke V/krpm	Noise		Moment of inertia kgm²×10⁻³	Weight kg
	kW	HP			P	Hz	Speed n min⁻¹	Full-load Efficiency %	Full-load P.F.	Rated current A		L_{WA} dB(A)	L_{PA} dB(A)		
WEPMA-56M-0.55-3000	0.55	0.75	56M	1.8	4	100	3000	81.5	0.95	1.2	110	61	49	0.14	3.5
WEPMA-56M-0.75-3000	0.75	1	56M	2.4	4	100	3000	83.5	0.95	1.6	110	61	49	0.2	4
WEPMA-63M-1.1-3000	1.1	1.5	63M	3.5	4	100	3000	85.2	0.95	2.3	113	61	49	0.4	5.2
WEPMA-63M-1.5-3000	1.5	2	63M	4.8	4	100	3000	86.5	0.95	3.1	113	61	49	0.53	5.8
WEPMA-71M-2.2-3000	2.2	3	71M	7.0	4	100	3000	88	0.95	4.5	109	61	49	0.94	10
WEPMA-80M-3-3000	3	4	80M	9.5	4	100	3000	89.1	0.95	6.0	104	62	50	2.17	13
WEPMA-80M-4-3000	4	5.5	80M	12.7	4	100	3000	90	0.95	7.9	106	62	50	2.6	15
WEPMA-90L-5.5-3000	5.5	7.5	90L	17.5	4	100	3000	90.9	0.95	10.8	104	67	55	3.03	16.1
WEPMA-100L-7.5-3000	7.5	10	100L	23.9	4	100	3000	91.7	0.95	14,6	102	74	62	4.03	20
WEPMA-100L-11-3000	11	15	100L	35.0	4	100	3000	92.6	0.95	21.2	109	74	62	13.1	31
WEPMA-112M-15-3000	15	20	112M	47.7	4	100	3000	93.3	0.95	28.7	112	77	65	15.44	32
WEPMA-112M-18.5-3000	18.5	25	112M	58.9	4	100	3000	93.7	0.95	35.3	109	77	65	19	39
WEPMA-132S-22-3000	22	30	132S	70.0	4	100	3000	94	0.95	41.8	108	79	67	30	47
WEPMA-132M-30-3000	30	40	132M	95.5	4	100	3000	94.5	0.95	56.7	107	79	67	40	60
WEPMA-160M-37-3000	37	50	160M	117.8	4	100	3000	94.8	0.95	69.8	112	81	68	75.5	81
WEPMA-160M-45-3000	45	60	160M	143.2	4	100	3000	95	0.95	84.7	110	81	68	92.6	89

Note: The above electrical parameters have taken into account the influence of inverter voltage drop, and the difference of inverter performance will bring some deviation, which is for reference only.

WEPM-3000r/min IE4 Cast iron motor

Type	Rated power		Frame	Full-load torque Nm	pole	Frequency	380 V				Ke V/krpm	Noise		Moment of inertia kgm²×10⁻³	Weight kg
	kW	HP			P	Hz	Speed n min⁻¹	Full-load Efficiency %	Full-load P.F.	Rated current A		L_{WA} dB(A)	L_{PA} dB(A)		
WEPM-80M-3-3000	3	4	80M	9.5	4	100	3000	89.1	0.95	6.0	104	62	50	2.17	16.2
WEPM-80M-4-3000	4	5.5	80M	12.7	4	100	3000	90	0.95	7.9	106	62	50	2.6	17
WEPM-90L-5.5-3000	5.5	7.5	90L	17.5	4	100	3000	90.9	0.95	10.8	104	67	55	3.03	23
WEPM-100L-7.5-3000	7.5	10	100L	23.9	4	100	3000	91.7	0.95	14.6	102	74	62	4.03	29
WEPM-100L-11-3000	11	15	100L	35.0	4	100	3000	92.6	0.95	21.2	109	74	62	13.1	36
WEPM-112M-15-3000	15	20	112M	47.7	4	100	3000	93.3	0.95	28.7	106	77	65	15.44	54.1
WEPM-112M-18.5-3000	18.5	25	112M	58.9	4	100	3000	93.7	0.95	35.3	109	77	65	19	56
WEPM-132S-22-3000	22	30	132S	70.0	6	150	3000	94	0.95	41	105	79	67	30	67
WEPM-132M-30-3000	30	40	132M	95.5	6	150	3000	94.5	0.95	55	107	79	67	40	76
WEPM-160M-37-3000	37	50	160M	117.8	6	150	3000	94.8	0.95	68	106	81	68	76	112
WEPM-160M-45-3000	45	60	160M	143.2	6	150	3000	95	0.95	82	106	81	68	93	132
WEPM-180M-55-3000	55	75	180M	175.1	8	200	3000	95.3	0.95	100	105	83	70	205	245
WEPM-180M-75-3000	75	100	180M	238.7	8	200	3000	95.6	0.95	136	106	83	70	220	258
WEPM-200L-90-3000	90	125	200L	286.5	8	200	3000	95.8	0.95	163	107	84	71	450	355
WEPM-200L-110-3000	110	150	200L	350.1	8	200	3000	96	0.95	199	106	84	71	508	365
WEPM-225M-132-3000	132	175	225M	420.2	8	200	3000	96.2	0.95	238	107	86	73	748	400
WEPM-250M-160-3000	160	220	250M	509.3	8	200	3000	96.3	0.95	288	107	89	75	1450	475
WEPM-250M-185-3000	185	250	250M	588.9	8	200	3000	96.4	0.95	333	107	89	75	1536	485
WEPM-280S-200-3000	200	270	280S	636.6	8	200	3000	96.5	0.95	360	106	91	77	1700	655
WEPM-280S-220-3000	220	300	280S	700.3	8	200	3000	96.5	0.95	396	106	91	77	1792	702
WEPM-280S-250-3000	250	340	280S	795.8	8	200	3000	96.5	0.95	450	105	91	77	2697	743
WEPM-315S-280-3000	280	380	315S	891.2	8	200	3000	96.5	0.95	504	105	92	78	4900	940
WEPM-315S-315-3000	315	430	315S	1002.6	8	200	3000	96.5	0.95	567	106	92	78	5400	945

Note: The above electrical parameters have taken into account the influence of inverter voltage drop, and the difference of inverter performance will bring some deviation, which is for reference only.

WEPMA-1500r/min IE4 Aluminum housing motor

Type	Rated power		Frame	Full-load torque Nm	pole	Frequency	380 V				Ke V/krpm	Noise		Moment of inertia kgm²×10⁻³	Weight kg
	kW	HP			P	Hz	Speed n min⁻¹	Full-load Efficiency %	Full-load P.F.	Rated current A		L_{WA} dB(A)	L_{PA} dB(A)		
WEPMA-56M-0.25-1500	0.25	0.35	56M	1.6	4	50	1500	77.9	0.95	0.6	219	55	43	0.14	3.5
WEPMA-63M-0.37-1500	0.37	0.5	63M	2.4	4	50	1500	81.1	0.95	0.8	226	55	43	0.28	4.8
WEPMA-63M-0.4-1500	0.4	0.55	63M	2.5	4	50	1500	81.7	0.95	0.9	226	55	43	0.28	4.8
WEPMA-63M-0.55-1500	0.55	0.75	63M	3.5	4	50	1500	83.9	0.95	1.2	226	55	43	0.4	5.2
WEPMA-71M-0.75-1500	0.75	1	71M	4.8	4	50	1500	85.7	0.95	1.6	217	55	43	0.73	8
WEPMA-71M-1.1-1500	1.1	1.5	71M	7.0	4	50	1500	87.2	0.95	2.3	217	56	44	0.94	10
WEPMA-80M-1.5-1500	1.5	2	80M	9.5	4	50	1500	88.2	0.95	3.0	212	56	44	2.17	14
WEPMA-90S-2.2-1500	2.2	3	90S	14.0	4	50	1500	89.5	0.95	4.4	204	59	47	2.52	15.4
WEPMA-90L-3-1500	3	4	90L	19.1	4	50	1500	90.4	0.95	5.9	215	59	47	3.53	16.8
WEPMA-100L-4-1500	4	5.5	100L	25.5	4	50	1500	91.1	0.95	7.8	218	64	52	9.63	25
WEPMA-100L-5.5-1500	5.5	7.5	100L	35.0	4	50	1500	91.9	0.95	10.7	217	64	52	13.1	31
WEPMA-112M-7.5-1500	7.5	10	112M	47.7	4	50	1500	92.6	0.95	14.5	219	65	53	15.44	45
WEPMA-132S-11-1500	11	15	132S	70.0	4	50	1500	93.3	0.95	21.1	212	71	59	30	47
WEPMA-132M-15-1500	15	20	132M	95.5	4	50	1500	93.9	0.95	28.6	213	71	59	40	61
WEPMA-160M-18.5-1500	18.5	25	160M	117.8	4	50	1500	94.2	0.95	35.1	223	73	60	75.5	81
WEPMA-160M-22-1500	22	30	160M	140.1	4	50	1500	94.5	0.95	41.6	219	73	60	92.6	89

Note: The above electrical parameters have taken into account the influence of inverter voltage drop, and the difference of inverter performance will bring some deviation, which is for reference only.

WEPM-1500r/min IE4 Cast iron motor

Type	Rated power		Frame	Full-load torque Nm	pole	Frequency	380 V				Ke V/krpm	Noise		Moment of inertia kgm²×10⁻³	Weight kg
	kW	HP			P	Hz	Speed n min⁻¹	Full-load Efficiency %	Full-load P.F.	Rated current A		L_{WA} dB(A)	L_{PA} dB(A)		
WEPM-80M-1.5-1500	1.5	2	80M	9.5	4	50	1500	88.2	0.95	3.0	212	56	44	2.17	16.2
WEPM-90S-2.2-1500	2.2	3	90S	14.0	4	50	1500	89.5	0.95	4.4	204	59	47	2.52	23.4
WEPM-90L-3-1500	3	4	90L	19.1	4	50	1500	90.4	0.95	5.9	215	59	47	3.53	23.8
WEPM-100L-4-1500	4	5.5	100L	25.5	4	50	1500	91.1	0.95	7.8	218	64	52	9.63	33.6
WEPM-100L-5.5-1500	5.5	7.5	100L	35.0	4	50	1500	91.9	0.95	10.7	217	64	52	13.1	36
WEPM-112M-7.5-1500	7.5	10	112M	47.7	4	50	1500	92.6	0.95	14.5	219	65	53	15.44	54.1
WEPM-132S-11-1500	11	15	132S	70.0	6	75	1500	93.3	0.95	20	214	71	59	30	66
WEPM-132M-15-1500	15	20	132M	95.5	6	75	1500	93.9	0.95	28	215	71	59	40	78
WEPM-160M-18.5-1500	18.5	25	160M	117.8	6	75	1500	94.2	0.95	34	213	73	60	76	115
WEPM-160M-22-1500	22	30	160M	140.1	6	75	1500	94.5	0.95	40	213	73	60	93	135
WEPM-180M-30-1500	30	40	180M	191.0	8	100	1500	94.9	0.95	55	215	76	63	185	180
WEPM-180M-37-1500	37	50	180M	235.5	8	100	1500	95.2	0.95	67	215	76	63	195	259
WEPM-180L-45-1500	45	60	180L	286.5	8	100	1500	95.4	0.95	82	213	76	63	239	343
WEPM-200L-55-1500	55	75	200L	350.1	8	100	1500	95.7	0.95	100	212	76	63	508	368
WEPM-225S-75-1500	75	100	225S	477.5	8	100	1500	96	0.95	136	211	78	65	788	385
WEPM-225M-90-1500	90	125	225M	572.9	8	100	1500	96.1	0.95	163	213	78	65	1536	463
WEPM-250M-110-1500	110	150	250M	700.3	8	100	1500	96.3	0.95	198	214	79	65	1792	518
WEPM-280S-132-1500	132	175	280S	840.3	8	100	1500	96.4	0.95	238	215	80	66	2517	665
WEPM-280M-160-1500	160	220	280M	1018.6	8	100	1500	96.6	0.95	288	215	80	66	3056	732
WEPM-280M-185-1500	185	250	280M	1177.7	8	100	1500	96.7	0.95	332	210	80	66	3536	789
WEPM-315S-200-1500	200	270	315S	1273.2	8	100	1500	96.7	0.95	359	210	88	74	4200	880
WEPM-315S-220-1500	220	297	315S	1400.5	8	100	1500	96.7	0.95	395	210	88	74	4500	910
WEPM-315S-250-1500	250	340	315S	1591.5	8	100	1500	96.7	0.95	449	213	88	74	4724	950
WEPM-315M-280-1500	280	380	315M	1782.5	8	100	1500	96.7	0.95	503	211	88	74	5153	995

Note: The above electrical parameters have taken into account the influence of inverter voltage drop, and the difference of inverter performance will bring some deviation, which is for reference only.

WEPMA-1000r/min IE4 Aluminum housing motor

Type	Rated power		Frame	Full-load torque Nm	pole	Frequency	380 V				Ke V/krpm	Noise		Moment of inertia kgm²×10⁻³	Weight kg
	kW	HP			P	Hz	Speed n min⁻¹	Full-load Efficiency %	Full-load P.F.	Rated current A		L_{WA} dB(A)	L_{PA} dB(A)		
WEPMA-63M-0.25-1000	0.25	0.35	63M	2.4	4	33.3	1000	74.1	0.95	0.6	339	52	41	0.28	4.8
WEPMA-63M-0.37-1000	0.37	0.5	63M	3.5	4	33.3	1000	78	0.95	0.8	339	52	40	0.4	5.2
WEPMA-63M-0.4-1000	0.4	0.55	63M	3.8	4	33.3	1000	78.8	0.95	0.9	339	52	40	0.4	5.2
WEPMA-71M-0.55-1000	0.55	0.75	71M	5.3	4	33.3	1000	80.9	0.95	1.2	326	54	42	0.73	8
WEPMA-71M-0.75-1000	0.75	1	71M	7.2	4	33.3	1000	82.7	0.95	1.6	326	54	42	0.94	10
WEPMA-80M-1.1-1000	1.1	1.5	80M	10.5	4	33.3	1000	84.5	0.95	2.3	316	54	42	2.17	14
WEPMA-90S-1.5-1000	1.5	2	90S	14.3	4	33.3	1000	85.9	0.95	3.1	308	57	45	2.52	15.4
WEPMA-100L-2.2-1000	2.2	3	100L	21.0	4	33.3	1000	87.4	0.95	4.5	304	61	49	3.53	19
WEPMA-100L-3-1000	3	4	100L	28.6	4	33.3	1000	88.6	0.95	6.1	325	61	49	10.94	25
WEPMA-100L-4-1000	4	5.5	100L	38.2	4	33.3	1000	89.5	0.95	8.0	326	61	49	13.1	32
WEPMA-112M-5.5-1000	5.5	7.5	112M	52.5	4	33.3	1000	90.5	0.95	10.9	326	65	53	17.2	45.8
WEPMA-132S-7.5-1000	7.5	10	132S	71.6	4	33.3	1000	91.3	0.95	14.7	320	69	57	30	47
WEPMA-160M-11-1000	11	15	160M	105.0	4	33.3	1000	92.3	0.95	21.3	335	73	60	75.5	81
WEPMA-160M-15-1000	15	20	160M	143.2	4	33.3	1000	92.9	0.95	28.9	338	73	60	92.6	89
WEPMA-160L-18.5-1000	18.5	25	160L	176.7	4	33.3	1000	93.4	0.95	35.4	335	73	60	113.2	94

Note: The above electrical parameters have taken into account the influence of inverter voltage drop, and the difference of inverter performance will bring some deviation, which is for reference only.

WEPM-1000r/min IE4 Cast iron motor

Type	Rated power		Frame	Full-load torque Nm	pole	Frequency	380 V				Ke V/krpm	Noise		Moment of inertia kgm²×10⁻³	Weight kg
	kW	HP			P	Hz	Speed n min⁻¹	Full-load Efficiency %	Full-load P.F.	Rated current A		L_{WA} dB(A)	L_{PA} dB(A)		
WEPM-80M-1.1-1000	1.1	1.5	80M	10.5	4	33.3	1000	84.5	0.95	2.3	316	54	42	2.17	16.2
WEPM-90S-1.5-1000	1.5	2	90S	14.3	4	33.3	1000	85.9	0.95	3.1	308	57	45	2.52	22.4
WEPM-100L-2.2-1000	2.2	3	100L	21.0	4	33.3	1000	87.4	0.95	4.5	304	61	49	3.53	27.8
WEPM-100L-3-1000	3	4	100L	28.6	4	33.3	1000	88.6	0.95	6.1	325	61	49	10.94	34.5
WEPM-100L-4-1000	4	5.5	100L	38.2	4	33.3	1000	89.5	0.95	8.0	326	61	49	13.1	36
WEPM-112M-5.5-1000	5.5	7.5	112M	52.5	4	33.3	1000	90.5	0.95	10.9	326	65	53	17.2	54.8
WEPM-132S-7.5-1000	7.5	10	132S	71.6	6	50	1000	91.3	0.95	14	329	69	57	30	59
WEPM-160M-11-1000	11	15	160M	105.0	6	50	1000	92.3	0.95	21	323	73	60	76	85
WEPM-160M-15-1000	15	20	160M	143.2	6	50	1000	92.9	0.95	28	324	73	60	93	131
WEPM-160L-18.5-1000	18.5	25	160L	176.7	6	50	1000	93.4	0.95	34	326	73	60	113	165
WEPM-180M-22-1000	22	30	180M	210.1	8	66.7	1000	93.7	0.95	41	327	73	60	176	193
WEPM-180L-30-1000	30	40	180L	286.5	8	66.7	1000	94.2	0.95	55	329	73	60	239	233
WEPM-200L-37-1000	37	50	200L	353.3	8	66.7	1000	94.5	0.95	68	320	73	60	508	257
WEPM-225M-45-1000	45	60	225M	429.7	8	66.7	1000	94.8	0.95	82	321	74	61	709	367
WEPM-225M-55-1000	55	75	225M	525.2	8	66.7	1000	95.1	0.95	100	322	74	61	867	396
WEPM-250M-75-1000	75	100	250M	716.2	8	66.7	1000	95.4	0.95	137	323	76	62	1792	468
WEPM-280M-90-1000	90	125	280M	859.4	8	66.7	1000	95.6	0.95	163	324	78	64	2637	685
WEPM-280M-110-1000	110	150	280M	1050.4	8	66.7	1000	95.8	0.95	199	325	78	64	3176	743
WEPM-280M-132-1000	132	175	280M	1260.5	8	66.7	1000	96	0.95	239	326	78	64	3835	810
WEPM-315S-160-1000	160	220	315S	1527.8	8	66.7	1000	96.2	0.95	289	326	83	69	4724	932
WEPM-315M-185-1000	185	250	315M	1766.6	8	66.7	1000	96.2	0.95	334	326	83	69	5153	1000

Note: The above electrical parameters have taken into account the influence of inverter voltage drop, and the difference of inverter performance will bring some deviation, which is for reference only.

Motor installation and dimensions

B3 Motor installation and dimensions

B3 Cast iron

IM B3
IM 1001
80~100

56~90S without eyebolt

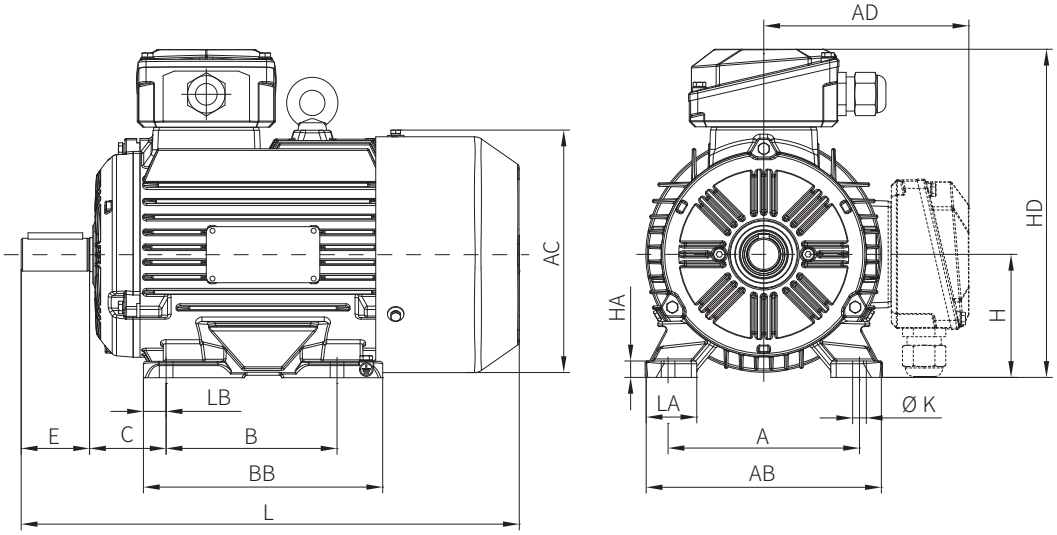

IM B3
IM 1001
112~180

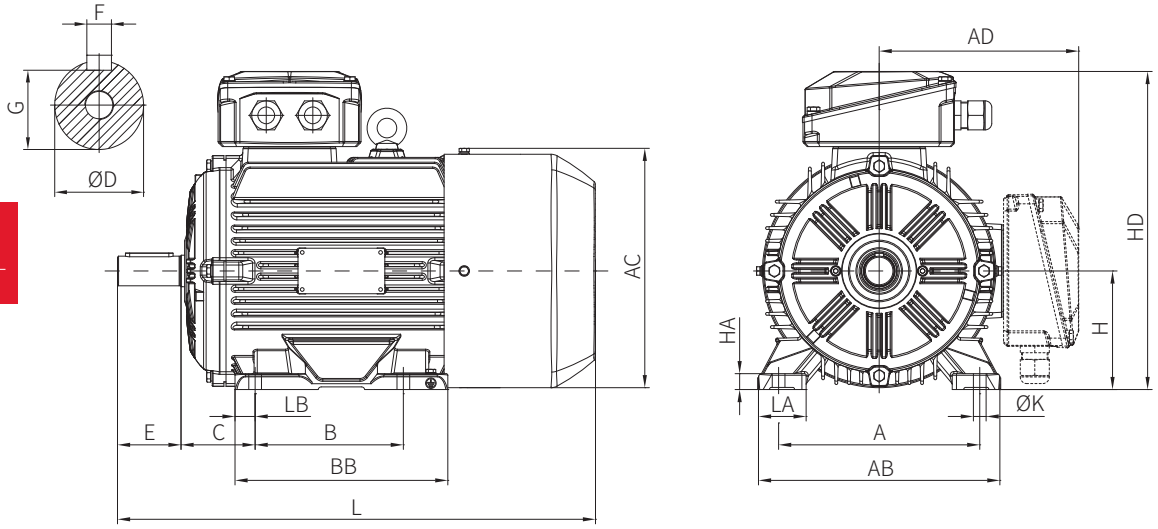

IM B3
IM 1001
200~315

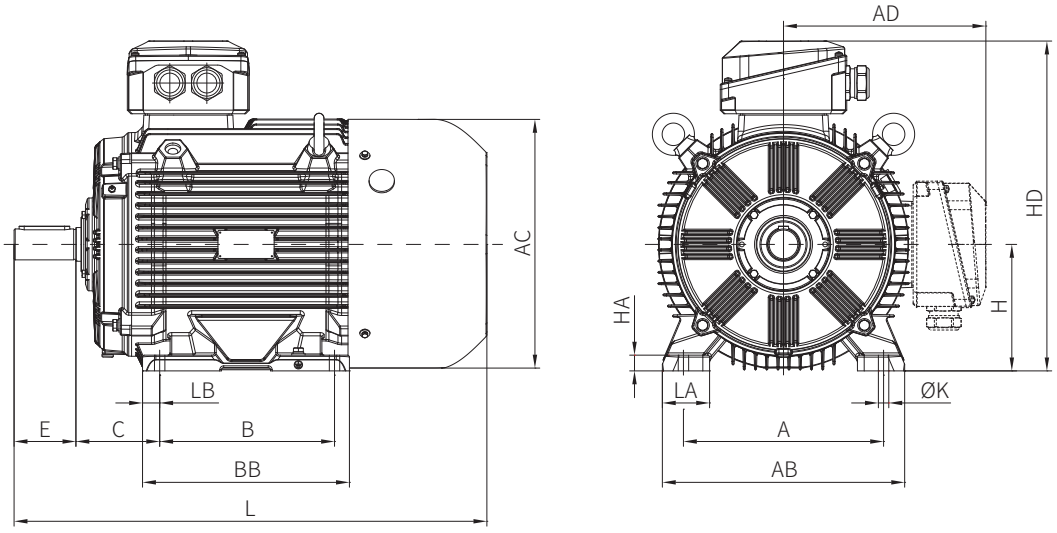

B3 Cast iron IE5

Frame	Speed (r/min)	Mounting dimensions (mm)									Boundary dimension (mm)								
		A	B	C	D	E	F	G	H	K	LA	LB	AB	BB	HA	AC	AD	HD	L
80M	1000~3000	125	100	50	19	40	6	15.5	80	10	32	15	157	146	10	163	136	221	299 (320)
90S	1000~3000	140	100	56	24	50	8	20	90	10	37	16.6	172	153	12	177	149	244	329
90L	1000~3000	140	125	56	24	50	8	20	90	10	37	16.6	172	175	12	177	149	244	351 (370)
100L	1000~3000	160	140	63	28	60	8	24	100	12	45	19	200	198	15	208	163	268	401
112M	1000~3000	190	140	70	28	60	8	24	112	12	45	19	228	201	15	226	189	305	417 (465)
132S	1000~3000	216	140	89	38	80	10	33	132	12	56.5	21.5	262	184	18	252	203	340	454
132M	1000~1500	216	178	89	38	80	10	33	132	12	56.5	21.5	262	222	18	252	203	340	492
160M	1000~3000	254	210	108	42	110	12	37	160	14.5	65	46	314	280	20	318	256	421	590
160L	1000~3000	254	254	108	42	110	12	37	160	14.5	65	46	314	324	20	318	256	421	634
180M	1500~3000	279	241	121	48	110	14	42.5	180	14.5	68	26.5	349	297	22	360	279	463	655
180L	1000~1500	279	279	121	48	110	14	42.5	180	14.5	68	26.5	349	335	22	360	279	463	693
200L	1000~3000	318	305	133	55	110	16	49	200	18.5	84	30	388	380	25	396	321	526	796
225S	1500	356	286	149	60	140	18	53	225	18.5	84	43	431	368	28	442	345	570	846
225M	3000	356	311	149	55	110	16	49	225	18.5	84	30.5	431	368	28	442	345	570	841
225M	1000~1500	356	311	149	60	140	18	53	225	18.5	84	30.5	431	368	28	442	345	570	871
250M	3000	406	349	168	60	140	18	53	250	24	80	43	484	421	30	488	421	671	929
250M	1000~1500	406	349	168	65	140	18	58	250	24	80	43	484	421	30	488	421	671	929
280S	3000	457	368	190	65	140	18	58	280	24	84	55	542	460	35	547	449	728	1007
280S	1000~1500	457	368	190	75	140	20	67.5	280	24	84	55	542	460	35	547	449	728	1007
280M	3000	457	419	190	65	140	18	58	280	24	84	58.5	542	515	35	547	449	728	1055
280M	1000~1500	457	419	190	75	140	20	67.5	280	24	84	58.5	542	515	35	547	449	728	1055
315S	3000	508	406	216	65	140	18	58	315	28	115	46	628	540	40	631	507	822	1190
315S	1000~1500	508	406	216	80	170	22	71	315	28	115	46	628	540	40	631	507	822	1220
315M	3000	508	457	216	65	140	18	58	315	28	115	46	628	640	40	631	507	822	1290
315M	1000~1500	508	457	216	80	170	22	71	315	28	115	46	628	640	40	631	507	822	1320
315L	3000	508	508	216	65	140	18	58	315	28	115	46	628	640	40	631	507	822	1290
315L	1000~1500	508	508	216	80	170	22	71	315	28	115	46	628	640	40	631	507	822	1320

Note: The dimensions in brackets are the dimensions of the descending center height series.

B3 Cast iron IE4

Frame	Mounting dimensions (mm)									Boundary dimension (mm)								
	A	B	C	D	E	F	G	H	K	LA	LB	AB	BB	HA	AC	AD	HD	L
80M	125	100	50	19	40	6	15.5	80	10	32	15	157	146	10	163	136	221	299
90S	140	100	56	24	50	8	20	90	10	37	16.6	172	153	12	177	149	244	329
90L	140	125	56	24	50	8	20	90	10	37	16.6	172	175	12	177	149	244	351
100L	160	140	63	28	60	8	24	100	12	45	19	200	198	15	208	163	268	401
112M	190	140	70	28	60	8	24	112	12	45	19	228	201	15	226	189	305	417
132S	216	140	89	38	80	10	33	132	12	56.5	21.5	262	184	18	252	203	340	454
132M	216	178	89	38	80	10	33	132	12	56.5	21.5	262	222	18	252	203	340	492
160M	254	210	108	42	110	12	37	160	14.5	65	46	314	280	20	318	256	421	590
160L	254	254	108	42	110	12	37	160	14.5	65	46	314	324	20	318	256	421	634
180M	279	241	121	48	110	14	42.5	180	14.5	68	26.5	349	297	22	360	279	463	655
180L	279	279	121	48	110	14	42.5	180	14.5	68	26.5	349	335	22	360	279	463	693
200L	318	305	133	55	110	16	49	200	18.5	84	30	388	380	25	396	321	526	796
225S	356	286	149	60	140	18	53	225	18.5	84	43	431	368	28	442	345	570	846
225M	356	311	149	60	140	18	53	225	18.5	84	30.5	431	368	28	442	345	570	871
250M	406	349	168	65	140	18	58	250	24	80	43	484	421	30	488	421	671	929
280S	457	368	190	75	140	20	67.5	280	24	84	55	542	460	35	547	449	728	1007
280M	457	419	190	75	140	20	67.5	280	24	84	58.5	542	515	35	547	449	728	1055
315S	508	406	216	80	170	22	71	315	28	115	46	628	540	40	631	507	822	1220
315M	508	457	216	80	170	22	71	315	28	115	46	628	640	40	631	507	822	1320

B3 Cast aluminum

IM B3
IM 1001
56~100

56~90S without eyebolt

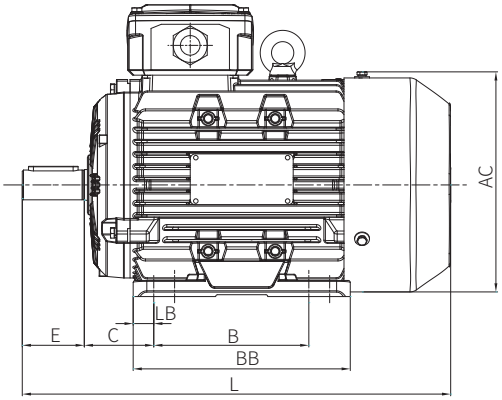

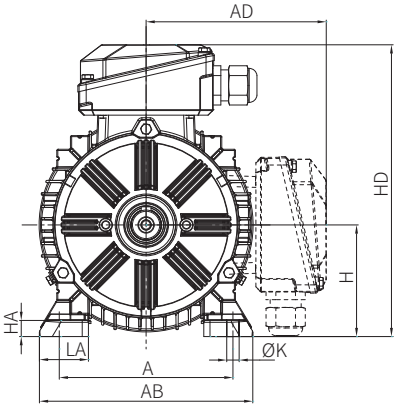

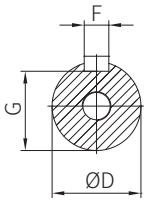

IM B3
IM 1001
112~160

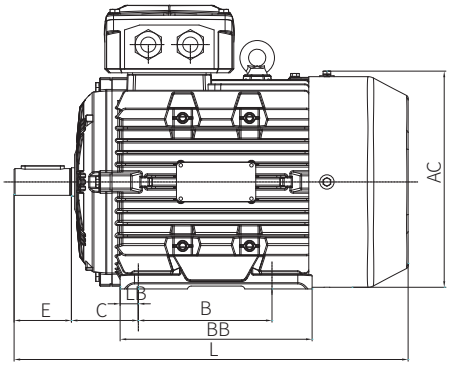

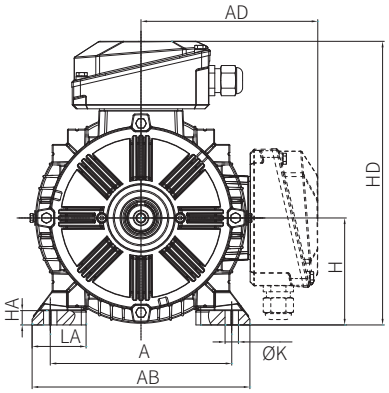

B3 Cast aluminum IE5

Frame	Speed (r/min)	Mounting dimensions (mm)									Boundary dimension (mm)								
		A	B	C	D	E	F	G	H	K	LA	LB	AB	BB	HA	AC	AD	HD	L
63M	1000~3000	100	80	40	11	23	4	8.5	63	7	31	12.5	125	100	8	125	102	165	233
71M	1000~3000	112	90	45	14	30	5	11	71	7	30	14.5	138	115	9	141	110	181	250
80M	1000~3000	125	100	50	19	40	6	15.5	80	10	38.5	12.5	156	125	10	160	131	211	315 (336)
90S	1000~3000	140	100	56	24	50	8	20	90	10	39.5	16.6	172	150	13	177	149	244	329
90L	1000~3000	140	125	56	24	50	8	20	90	10	39.5	16.6	172	175	13	177	149	244	351 (370)
100L	1000~3000	160	140	63	28	60	8	24	100	12	46.5	19	200	198	13	208	163	268	401
112M	1000~3000	190	140	70	28	60	8	24	112	12	56.5	19	228	201	15	226	189	305	417 (465)
132S	1000~3000	216	140	89	38	80	10	33	132	12	60	45	262	230	18	260	210	345	450
132M	1000~3000	216	178	89	38	80	10	33	132	12	60	36	262	250	18	260	210	345	490
160M	1000~3000	254	210	108	42	110	12	37	160	14.5	69.5	27	314	280	20	320	260	422	620
160L	1000~3000	254	254	108	42	110	12	37	160	14.5	69.5	27	314	324	20	320	260	422	665

Note: The dimensions in brackets are the dimensions of the descending center height series.

B3 Cast aluminum IE4

Frame	Mounting dimensions (mm)									Boundary dimension (mm)								
	A	B	C	D	E	F	G	H	K	LA	LB	AB	BB	HA	AC	AD	HD	L
56M	90	71	36	9	20	3	7.2	56	6	25	12.5	110	91	7.5	106	96	152	186
63M	100	80	40	11	23	4	8.5	63	7	31	12.5	125	100	8	125	102	165	233
71M	112	90	45	14	30	5	11	71	7	30	14.5	138	115	9	141	110	181	250
80M	125	100	50	19	40	6	15.5	80	10	38.5	12.5	156	125	10	160	131	211	315
90S	140	100	56	24	50	8	20	90	10	39.5	16.6	172	150	13	177	149	244	329
90L	140	125	56	24	50	8	20	90	10	39.5	16.6	172	175	13	177	149	244	351
100L	160	140	63	28	60	8	24	100	12	46.5	19	200	198	13	208	163	268	401
112M	190	140	70	28	60	8	24	112	12	56.5	19	228	201	15	226	189	305	417
132S	216	140	89	38	80	10	33	132	12	60	45	262	230	18	260	210	345	450
132M	216	178	89	38	80	10	33	132	12	60	36	262	250	18	260	210	345	490
160M	254	210	108	42	110	12	37	160	14.5	69.5	27	314	280	20	320	260	422	620
160L	254	254	108	42	110	12	37	160	14.5	69.5	27	314	324	20	320	260	422	665

B35 Motor installation and dimensions

B35 Cast iron

IM B35
IM 2001
80~100

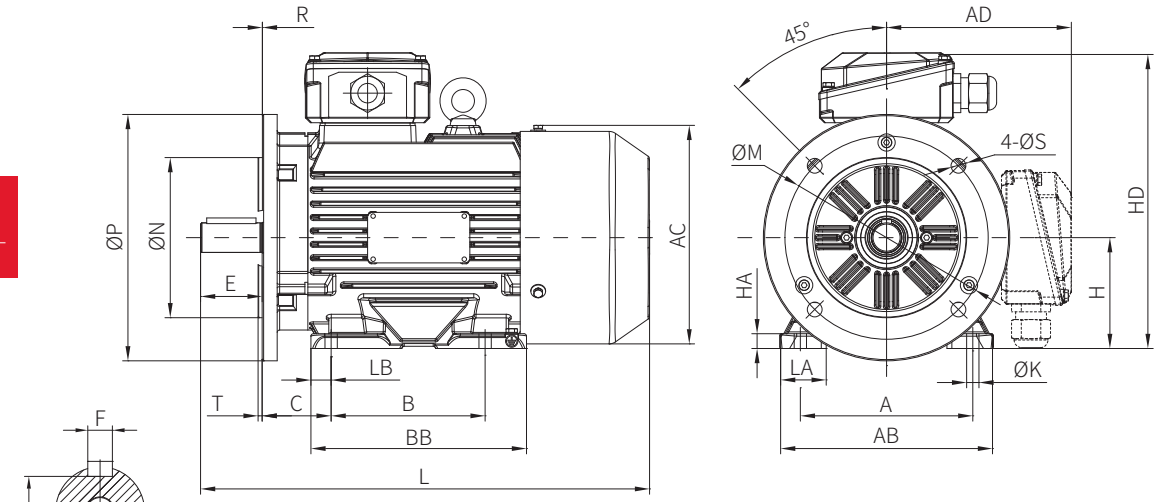

IM B35
IM 2001
112~180

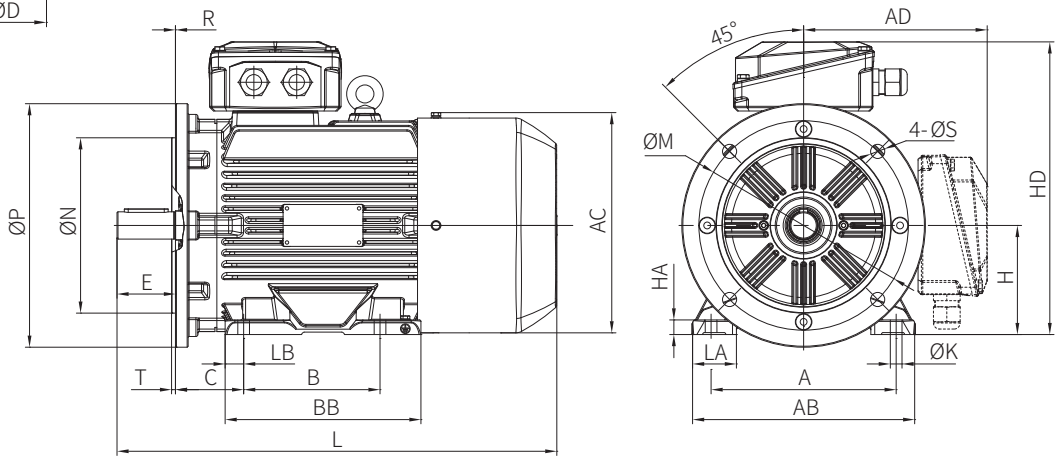

IM B35
IM 2001
200~315

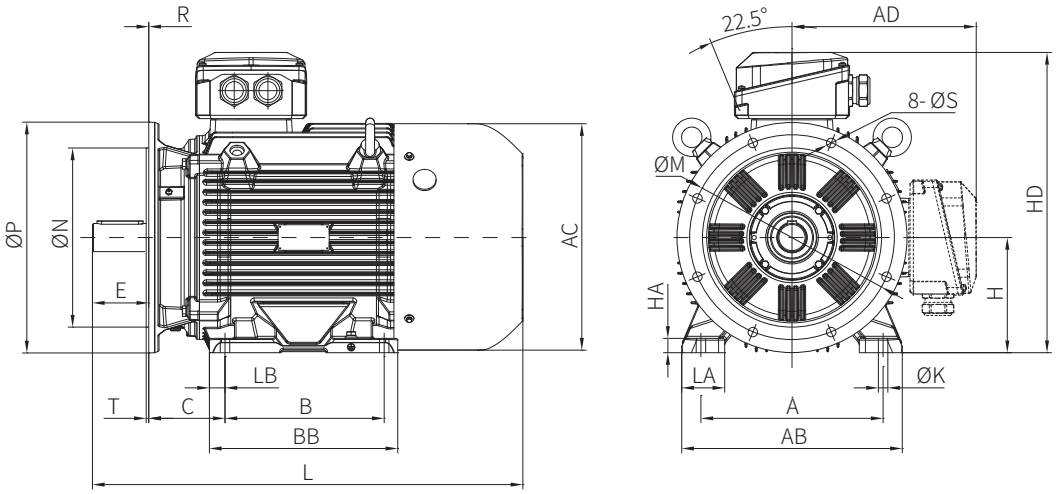

B35 Cast iron IE5

Frame	Speed (r/min)	Mounting dimensions (mm)															Boundary dimension (mm)								
		A	B	C	D	E	F	G	H	K	M	N	P	R	S	T	LA	LB	AB	BB	HA	AC	AD	HD	L
80M	1000~3000	125	100	50	19	40	6	15.5	80	10	165	130	200	0±1.5	12	3.5	32	15	157	146	10	163	136	221	299 (320)
90S	1000~3000	140	100	56	24	50	8	20	90	10	165	130	200	0±1.5	12	3.5	37	16.6	172	153	12	177	149	244	329
90L	1000~3000	140	125	56	24	50	8	20	90	10	165	130	200	0±1.5	12	3.5	37	16.6	172	175	12	177	149	244	351 (370)
100L	1000~3000	160	140	63	28	60	8	24	100	12	215	180	250	0±2.0	14.5	4	45	19	200	198	15	208	163	268	401
112M	1000~3000	190	140	70	28	60	8	24	112	12	215	180	250	0±2.0	14.5	4	45	19	228	201	15	226	189	305	417 (465)
132S	1000~3000	216	140	89	38	80	10	33	132	12	265	230	300	0±2.0	14.5	4	56.5	21.5	262	184	18	252	203	340	454
132M	1000~1500	216	178	89	38	80	10	33	132	12	265	230	300	0±2.0	14.5	4	56.5	21.5	262	222	18	252	203	340	492
160M	1000~3000	254	210	108	42	110	12	37	160	14.5	300	250	350	0±3.0	18.5	5	65	46	314	280	20	318	256	421	590
160L	1000~3000	254	254	108	42	110	12	37	160	14.5	300	250	350	0±3.0	18.5	5	65	46	314	324	20	318	256	421	634
180M	1500~3000	279	241	121	48	110	14	42.5	180	14.5	300	250	350	0±3.0	18.5	5	68	26.5	349	297	22	360	279	463	655
180L	1000~1500	279	279	121	48	110	14	42.5	180	14.5	300	250	350	0±3.0	18.5	5	68	26.5	349	335	22	360	279	463	693
200L	1000~3000	318	305	133	55	110	16	49	200	18.5	350	300	400	0±3.0	18.5	5	84	30	388	380	25	396	321	526	796
225S	1500	356	286	149	60	140	18	53	225	18.5	400	350	450	0±4.0	18.5	5	84	43	431	368	28	442	345	570	846
225M	3000	356	311	149	55	110	16	49	225	18.5	400	350	450	0±4.0	18.5	5	84	30.5	431	368	28	442	345	570	841
225M	1000~1500	356	311	149	60	140	18	53	225	18.5	400	350	450	0±4.0	18.5	5	84	30.5	431	368	28	442	345	570	841
250M	3000	406	349	168	60	140	18	53	250	24	500	450	550	0±4.0	18.5	5	80	43	484	421	30	488	421	671	929
250M	1000~1500	406	349	168	65	140	18	58	250	24	500	450	550	0±4.0	18.5	5	80	43	484	421	30	488	421	671	929
280S	3000	457	368	190	65	140	18	58	280	24	500	450	550	0±4.0	18.5	5	84	55	542	460	35	547	449	728	1007
280S	1000~1500	457	368	190	75	140	20	67.5	280	24	500	450	550	0±4.0	18.5	5	84	55	542	460	35	547	449	728	1007
280M	3000	457	419	190	65	140	18	58	280	24	500	450	550	0±4.0	18.5	5	84	58.5	542	515	35	547	449	728	1055
280M	1000~1500	457	419	190	75	140	20	67.5	280	24	500	450	550	0±4.0	18.5	5	84	58.5	542	515	35	547	449	728	1055
315S	3000	508	406	216	65	140	18	58	315	28	600	550	660	0±4.0	24	6	115	46	628	540	40	631	507	822	1190
315S	1000~1500	508	406	216	80	170	22	71	315	28	600	550	660	0±4.0	24	6	115	46	628	540	40	631	507	822	1220
315M	3000	508	457	216	65	140	18	58	315	28	600	550	660	0±4.0	24	6	115	46	628	640	40	631	507	822	1290
315M	1000~1500	508	457	216	80	170	22	71	315	28	600	550	660	0±4.0	24	6	115	46	628	640	40	631	507	822	1320
315L	3000	508	508	216	65	140	18	58	315	28	600	550	660	0±4.0	24	6	115	46	628	640	40	631	507	822	1290
315L	1000~1500	508	508	216	80	170	22	71	315	28	600	550	660	0±4.0	24	6	115	46	628	640	40	631	507	822	1320

Note: The dimensions in brackets are the dimensions of the descending center height series.

B35 Cast iron IE4

Frame	Mounting dimensions (mm)															Boundary dimension (mm)								
	A	B	C	D	E	F	G	H	K	M	N	P	R	S	T	LA	LB	AB	BB	HA	AC	AD	HD	L
80M	125	100	50	19	40	6	15.5	80	10	165	130	200	0±1.5	12	3.5	32	15	157	146	10	163	136	221	299
90S	140	100	56	24	50	8	20	90	10	165	130	200	0±1.5	12	3.5	37	16.6	172	153	12	177	149	244	329
90L	140	125	56	24	50	8	20	90	10	165	130	200	0±1.5	12	3.5	37	16.6	172	175	12	177	149	244	351
100L	160	140	63	28	60	8	24	100	12	215	180	250	0±2.0	14.5	4	45	19	200	198	15	208	163	268	401
112M	190	140	70	28	60	8	24	112	12	215	180	250	0±2.0	14.5	4	45	19	228	201	15	226	189	305	417
132S	216	140	89	38	80	10	33	132	12	265	230	300	0±2.0	14.5	4	56.5	21.5	262	184	18	252	203	340	454
132M/L	216	178	89	38	80	10	33	132	12	265	230	300	0±2.0	14.5	4	56.5	21.5	262	222	18	252	203	340	492
160M	254	210	108	42	110	12	37	160	14.5	300	250	350	0±3.0	18.5	5	65	46	314	280	20	318	256	421	590
160L	254	254	108	42	110	12	37	160	14.5	300	250	350	0±3.0	18.5	5	65	46	314	324	20	318	256	421	634
180M	279	241	121	48	110	14	42.5	180	14.5	300	250	350	0±3.0	18.5	5	68	26.5	349	297	22	360	279	463	655
180L	279	279	121	48	110	14	42.5	180	14.5	300	250	350	0±3.0	18.5	5	68	26.5	349	335	22	360	279	463	693
200L	318	305	133	55	110	16	49	200	18.5	350	300	400	0±3.0	18.5	5	84	30	388	380	25	396	321	526	796
225S	356	286	149	60	140	18	53	225	18.5	400	350	450	0±4.0	18.5	5	84	43	431	368	28	442	345	570	846
225M	356	311	149	60	140	18	53	225	18.5	400	350	450	0±4.0	18.5	5	84	30.5	431	368	28	442	345	570	841
250M	406	349	168	65	140	18	58	250	24	500	450	550	0±4.0	18.5	5	80	43	484	421	30	488	421	671	929
280S	457	368	190	75	140	20	67.5	280	24	500	450	550	0±4.0	18.5	5	84	55	542	460	35	547	449	728	1007
280M	457	419	190	75	140	20	67.5	280	24	500	450	550	0±4.0	18.5	5	84	58.5	542	515	35	547	449	728	1055
315S	508	406	216	80	170	22	71	315	28	600	550	660	0±4.0	24	6	115	46	628	540	40	631	507	822	1220
315M	508	457	216	80	170	22	71	315	28	600	550	660	0±4.0	24	6	115	46	628	640	40	631	507	822	1320

B35 Cast aluminum

IM B35
IM 2001
56~100

56~90Swithout eyebolt

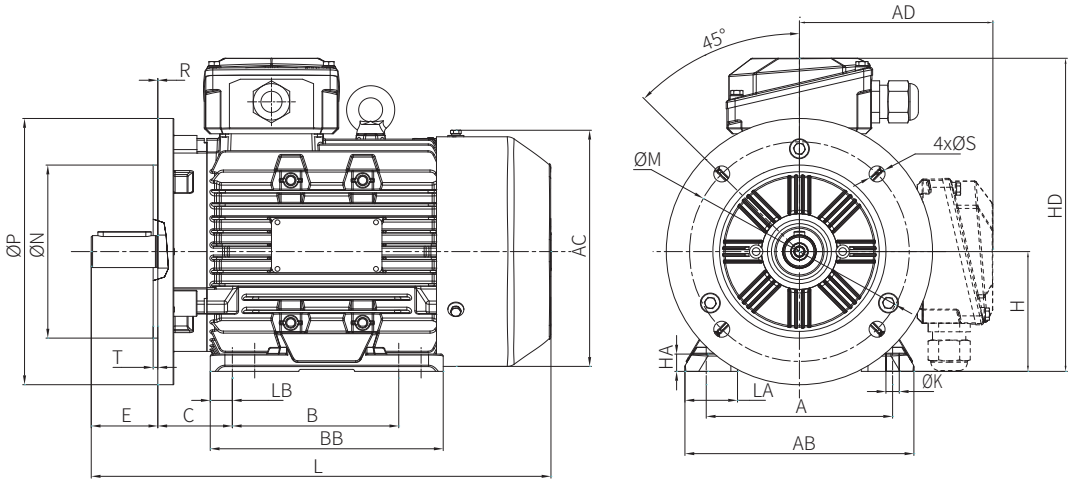

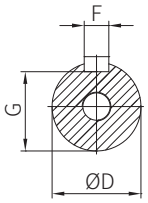

IM B35
IM 2001
112~160

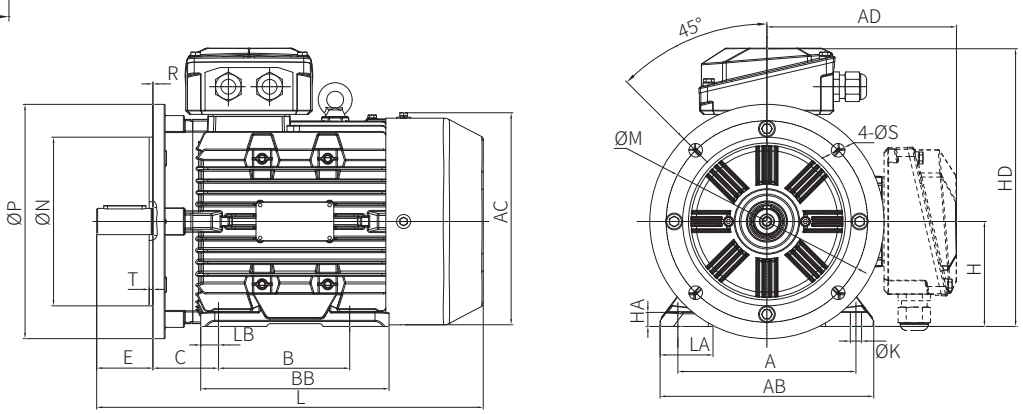

B35 Cast aluminum IE5

Frame	Speed (r/min)	Mounting dimensions (mm)															Boundary dimension (mm)								
		A	B	C	D	E	F	G	H	K	M	N	P	R	S	T	LA	LB	AB	BB	HA	AC	AD	HD	L
63M	1000~3000	100	80	40	11	23	4	8.5	63	7	115	95	140	0±1.0	10	3	31	12.5	125	100	8	125	102	165	233
71M	1000~3000	112	90	45	14	30	5	11	71	7	130	110	160	0±1.0	10	3.5	30	14.5	138	115	9	141	110	181	250
80M	1000~3000	125	100	50	19	40	6	15.5	80	10	165	130	200	0±1.5	12	3.5	38.5	12.5	156	125	10	160	131	211	315 (336)
90S	1000~3000	140	100	56	24	50	8	20	90	10	165	130	200	0±1.5	12	3.5	39.5	16.6	172	150	13	177	149	244	329
90L	1000~3000	140	125	56	24	50	8	20	90	10	165	130	200	0±1.5	12	3.5	39.5	16.6	172	175	13	177	149	244	351 (370)
100L	1000~3000	160	140	63	28	60	8	24	100	12	215	180	250	0±2.0	14.5	4	46.5	19	200	198	13	208	163	268	401
112M	1000~3000	190	140	70	28	60	8	24	112	12	215	180	250	0±2.0	14.5	4	56.5	19	228	201	15	226	189	305	417 (465)
132S	1000~3000	216	140	89	38	80	10	33	132	12	265	230	300	0±2.0	14.5	4	60	45	262	230	18	260	210	345	450
132M	1000~3000	216	178	89	38	80	10	33	132	12	265	230	300	0±2.0	14.5	4	60	36	262	250	18	260	210	345	490
160M	1000~3000	254	210	108	42	110	12	37	160	14.5	300	250	350	0±3.0	18.5	5	69.5	27	314	280	20	320	260	422	620
160L	1000~3000	254	254	108	42	110	12	37	160	14.5	300	250	350	0±3.0	18.5	5	69.5	27	314	324	20	320	260	422	665

Note: The dimensions in brackets are the dimensions of the descending center height series.

B35 Cast aluminum IE4

Frame	Mounting dimensions (mm)															Boundary dimension (mm)								
	A	B	C	D	E	F	G	H	K	M	N	P	R	S	T	LA	LB	AB	BB	HA	AC	AD	HD	L
56M	90	71	36	9	20	3	7.2	56	6	100	80	120	0±1.0	7	3	25	12.5	110	91	7.5	106	96	152	186
63M	100	80	40	11	23	4	8.5	63	7	115	95	140	0±1.0	10	3	31	12.5	125	100	8	125	102	165	233
71M	112	90	45	14	30	5	11	71	7	130	110	160	0±1.0	10	3.5	30	14.5	138	115	9	141	110	181	250
80M	125	100	50	19	40	6	15.5	80	10	165	130	200	0±1.5	12	3.5	38.5	12.5	156	125	10	160	131	211	315
90S	140	100	56	24	50	8	20	90	10	165	130	200	0±1.5	12	3.5	39.5	16.6	172	150	13	177	149	244	329
90L	140	125	56	24	50	8	20	90	10	165	130	200	0±1.5	12	3.5	39.5	16.6	172	175	13	177	149	244	351
100L	160	140	63	28	60	8	24	100	12	215	180	250	0±2.0	14.5	4	46.5	19	200	198	13	208	163	268	401
112M	190	140	70	28	60	8	24	112	12	215	180	250	0±2.0	14.5	4	56.5	19	228	201	15	226	189	305	417
132S	216	140	89	38	80	10	33	132	12	265	230	300	0±2.0	14.5	4	60	45	262	230	18	260	210	345	450
132M	216	178	89	38	80	10	33	132	12	265	230	300	0±2.0	14.5	4	60	36	262	250	18	260	210	345	490
160M	254	210	108	42	110	12	37	160	14.5	300	250	350	0±3.0	18.5	5	69.5	27	314	280	20	320	260	422	620
160L	254	254	108	42	110	12	37	160	14.5	300	250	350	0±3.0	18.5	5	69.5	27	314	324	20	320	260	422	665

B5&V1 Motor installation and dimensions

B5 & V1 Cast iron

IM B5/IM V1
IM 3001/IM 3011
80~100

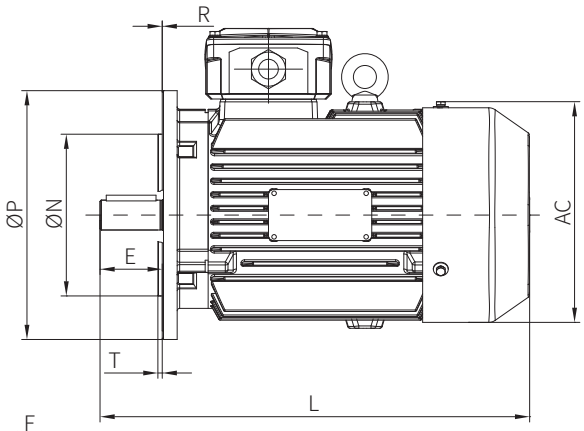

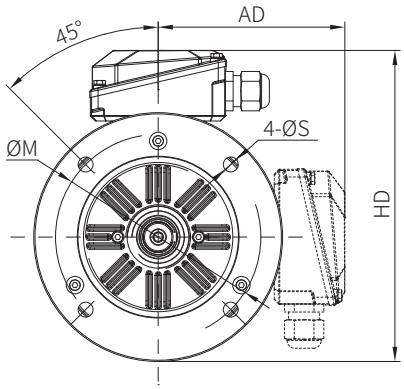

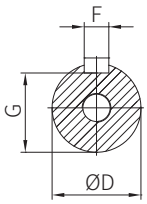

IM B5/IM V1
IM 3001/IM 3011
112~180

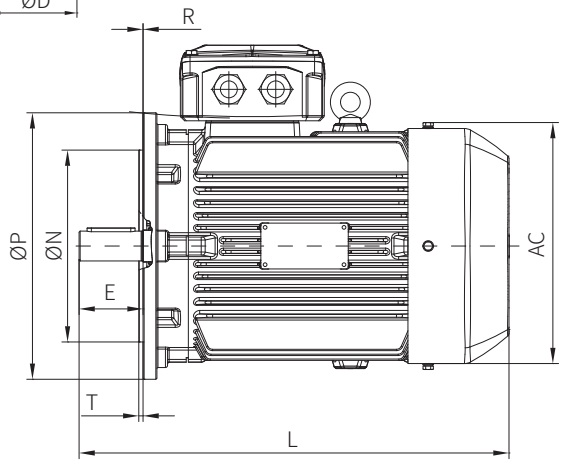

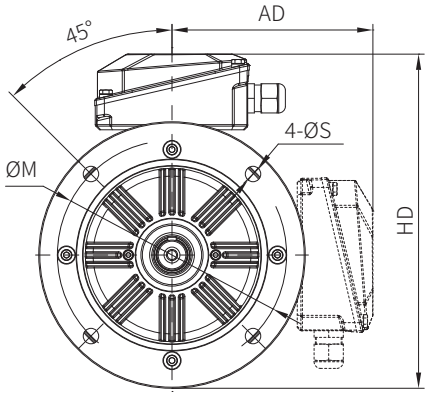

IM B5/IM V1
IM 3001/IM 3011
200~315

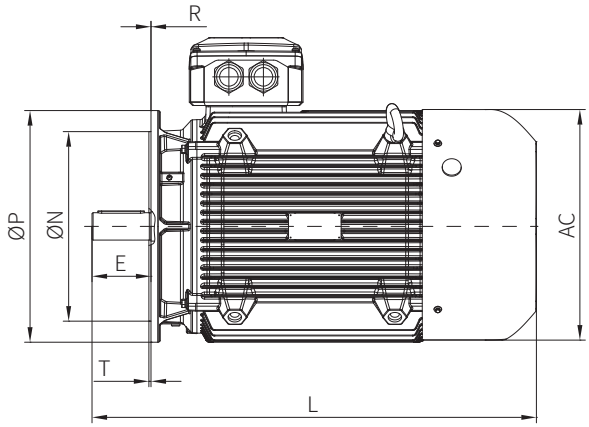

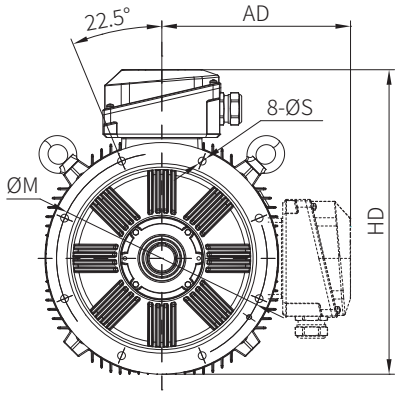

B5 & V1 Cast iron IE5

Frame	Speed (r/min)	Mounting dimensions (mm)										Boundary dimension (mm)			
		D	E	F	G	M	N	P	R	S	T	AC	AD	HD	L
80M	1000~3000	19	40	6	15.5	165	130	200	0±1.5	12	3.5	163	136	241	299 (320)
90S	1000~3000	24	50	8	20	165	130	200	0±1.5	12	3.5	177	149	254	329
90L	1000~3000	24	50	8	20	165	130	200	0±1.5	12	3.5	177	149	254	351 (370)
100L	1000~3000	28	60	8	24	215	180	250	0±2.0	14.5	4	208	163	293	401
112M	1000~3000	28	60	8	24	215	180	250	0±2.0	14.5	4	226	189	318	417 (465)
132S	1000~3000	38	80	10	33	265	230	300	0±2.0	14.5	4	252	203	358	454
132M	1000~1500	38	80	10	33	265	230	300	0±2.0	14.5	4	252	203	358	492
160M	1000~3000	42	110	12	37	300	250	350	0±3.0	18.5	5	318	256	436	590
160L	1000~3000	42	110	12	37	300	250	350	0±3.0	18.5	5	318	256	436	634
180M	1500~3000	48	110	14	42.5	300	250	350	0±3.0	18.5	5	360	279	458	655
180L	1000~1500	48	110	14	42.5	300	250	350	0±3.0	18.5	5	360	279	458	693
200L	1000~3000	55	110	16	49	350	300	400	0±3.0	18.5	5	396	321	526	796
225S	1500	60	140	18	53	400	350	450	0±4.0	18.5	5	442	345	580	846
225M	3000	55	110	16	49	400	350	450	0±4.0	18.5	5	442	345	580	841
225M	1000~1500	60	140	18	53	400	350	450	0±4.0	18.5	5	442	345	580	871
250M	3000	60	140	18	53	500	450	550	0±4.0	18.5	5	488	421	696	929
250M	1000~1500	65	140	18	58	500	450	550	0±4.0	18.5	5	488	421	696	929
280S	3000	65	140	18	58	500	450	550	0±4.0	18.5	5	547	449	723	1007
280S	1000~1500	75	140	20	67.5	500	450	550	0±4.0	18.5	5	547	449	723	1007
280M	3000	65	140	18	58	500	450	550	0±4.0	18.5	5	547	449	723	1055
280M	1000~1500	75	140	20	67.5	500	450	550	0±4.0	18.5	5	547	449	723	1055
315S	3000	65	140	18	58	600	550	660	0±4.0	24	6	631	507	850	1190
315S	1000~1500	80	170	22	71	600	550	660	0±4.0	24	6	631	507	850	1220
315M	3000	65	140	18	58	600	550	660	0±4.0	24	6	631	507	850	1290
315M	1000~1500	80	170	22	71	600	550	660	0±4.0	24	6	631	507	850	1320
315L	3000	65	140	18	58	600	550	660	0±4.0	24	6	631	507	850	1290
315L	1000~1500	80	170	22	71	600	550	660	0±4.0	24	6	631	507	850	1320

Note: The dimensions in brackets are the dimensions of the descending center height series.

B5 & V1 Cast iron IE4

Frame	Mounting dimensions (mm)										Boundary dimension (mm)			
	D	E	F	G	M	N	P	R	S	T	AC	AD	HD	L
80M	19	40	6	15.5	165	130	200	0±1.5	12	3.5	163	136	241	299
90S	24	50	8	20	165	130	200	0±1.5	12	3.5	177	149	254	329
90L	24	50	8	20	165	130	200	0±1.5	12	3.5	177	149	254	351
100L	28	60	8	24	215	180	250	0±2.0	14.5	4	208	163	293	401
112M	28	60	8	24	215	180	250	0±2.0	14.5	4	226	189	318	417
132S	38	80	10	33	265	230	300	0±2.0	14.5	4	252	203	358	454
132M	38	80	10	33	265	230	300	0±2.0	14.5	4	252	203	358	492
160M	42	110	12	37	300	250	350	0±3.0	18.5	5	318	256	436	590
160L	42	110	12	37	300	250	350	0±3.0	18.5	5	318	256	436	634
180M	48	110	14	42.5	300	250	350	0±3.0	18.5	5	360	279	458	655
180L	48	110	14	42.5	300	250	350	0±3.0	18.5	5	360	279	458	693
200L	55	110	16	49	350	300	400	0±3.0	18.5	5	396	321	526	796
225S	60	140	18	53	400	350	450	0±4.0	18.5	5	442	345	580	846
225M	60	140	18	53	400	350	450	0±4.0	18.5	5	442	345	580	871
250M	65	140	18	58	500	450	550	0±4.0	18.5	5	488	421	696	929
280S	75	140	20	67.5	500	450	550	0±4.0	18.5	5	547	449	723	1007
280M	75	140	20	67.5	500	450	550	0±4.0	18.5	5	547	449	723	1055
315S	80	170	22	71	600	550	660	0±4.0	24	6	631	507	850	1220
315M	80	170	22	71	600	550	660	0±4.0	24	6	631	507	850	1320

B5 & V1 Cast aluminum

IM B5/IM V1
IM 3001/IM 3011
56~100

56~90S without eyebolt

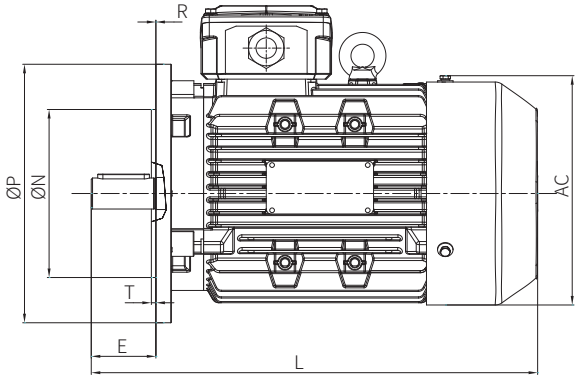

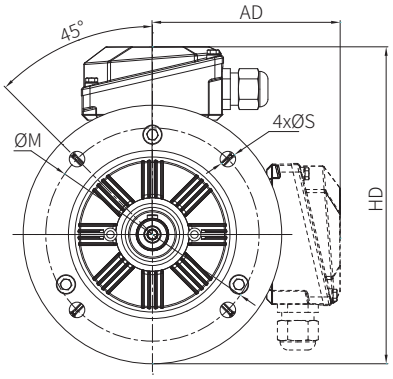

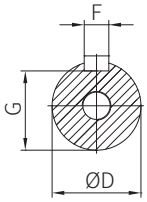

IM B5/IM V1
IM 3001/IM 3011
112~160

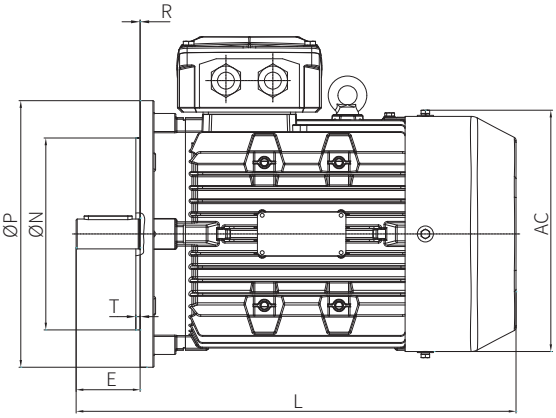

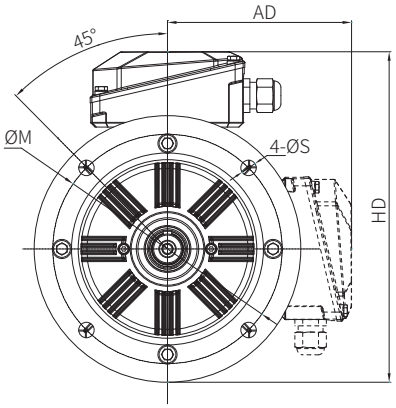

B5 & V1 Cast aluminum IE5

Frame	Speed r/min	Mounting dimensions (mm)										Boundary dimension (mm)			
		D	E	F	G	M	N	P	R	S	T	AC	AD	HD	L
63M	1000~3000	11	23	4	8.5	115	95	140	0±1.0	10	3	125	102	172	233
71M	1000~3000	14	30	5	11	130	110	160	0±1.0	10	3.5	141	110	190	250
80M	1000~3000	19	40	6	15.5	165	130	200	0±1.5	12	3.5	160	131	231	315 (336)
90S	1000~3000	24	50	8	20	165	130	200	0±1.5	12	3.5	177	149	254	329
90L	1000~3000	24	50	8	20	165	130	200	0±1.5	12	3.5	177	149	254	351 (370)
100L	1000~3000	28	60	8	24	215	180	250	0±2.0	14.5	4	208	163	293	401
112M	1000~3000	28	60	8	24	215	180	250	0±2.0	14.5	4	226	189	315	417 (465)
132S	1000~3000	38	80	10	33	265	230	300	0±2.0	14.5	4	260	210	363	450
132M	1000~3000	38	80	10	33	265	230	300	0±2.0	14.5	4	260	210	363	490
160M	1000~3000	42	110	12	37	300	250	350	0±3.0	18.5	5	320	260	437	620
160L	1000~3000	42	110	12	37	300	250	350	0±3.0	18.5	5	320	260	437	665

Note: The dimensions in brackets are the dimensions of the descending center height series.

B5 & V1 Cast aluminum IE4

Frame	Mounting dimensions (mm)										Boundary dimension (mm)			
	D	E	F	G	M	N	P	R	S	T	AC	AD	HD	L
56M	9	20	3	7.2	100	80	120	0±1.0	7	3	106	96	156	197
63M	11	23	4	8.5	115	95	140	0±1.0	10	3	125	102	172	233
71M	14	30	5	11	130	110	160	0±1.0	10	3.5	141	110	190	250
80M	19	40	6	15.5	165	130	200	0±1.5	12	3.5	160	131	231	315
90S	24	50	8	20	165	130	200	0±1.5	12	3.5	177	149	254	329
90L	24	50	8	20	165	130	200	0±1.5	12	3.5	177	149	254	351
100L	28	60	8	24	215	180	250	0±2.0	14.5	4	208	163	293	401
112M	28	60	8	24	215	180	250	0±2.0	14.5	4	226	189	315	417
132S	38	80	10	33	265	230	300	0±2.0	14.5	4	260	210	363	450
132M	38	80	10	33	265	230	300	0±2.0	14.5	4	260	210	363	490
160M	42	110	12	37	300	250	350	0±3.0	18.5	5	320	260	437	620
160L	42	110	12	37	300	250	350	0±3.0	18.5	5	320	260	437	665

Technical information

Terminal box

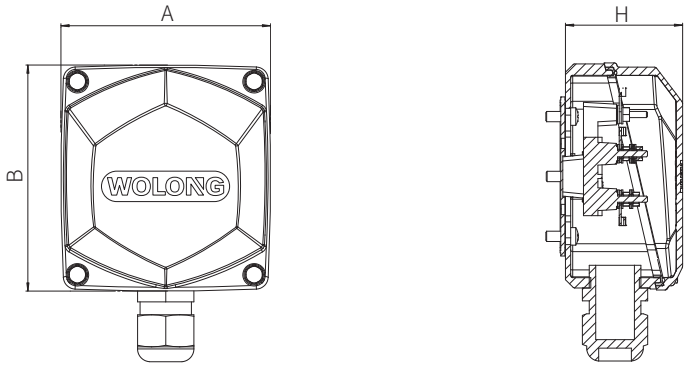

IE5 Standard frame size Terminal box

Frame	Boundary dimension AxBxH(mm)	Number and size of outlet holes	Single hole screw sleeve can lock cable diameter range (mm)	Thread of terminal
63~80	90x96x50	1-M25x1.5	Φ8~Φ12	M4
90~100	102x110x57.5	1-M25x1.5	Φ8~Φ12	M4
112~132	136x146x72	2-M25x1.5	Φ8~Φ12	M5
160~180	171x181x91	2-M32x1.5	Φ16~Φ21	M6
200~225	220x230x113	2-M50x1.5	Φ32~Φ39	M8
250~280	270x280x162	2-M63x1.5	Φ37~Φ44	M10
315	312x329x175	2-M63x1.5	Φ37~Φ44	M12

IE5 Smaller frame size Terminal box

Frame	Boundary dimension AxBxH(mm)	Number and size of outlet holes	Single hole screw sleeve can lock cable diameter range (mm)	Thread of terminal
63~80	90x96x50	1-M20x1.5	Φ6-Φ12	M4
90~100	102x110x57.5	1-M25x1.5	Φ13-Φ18	M4
112~132	136x146x72	2-M32x1.5	Φ16-Φ21	M6
160~180	171x181x91	2-M40x1.5	Φ22-Φ32	M8
200~225	220x230x113	2-M50x1.5	Φ32-Φ39	M10
250~280	270x280x116.5	2-M63x1.5	Φ37-Φ44	M12
315	312x329x175	2-M72x2	Φ42-Φ52	M16

IE4 Terminal box

Frame	Boundary dimension AxBxH(mm)	Number and size of outlet holes	Single hole screw sleeve can lock cable diameter range (mm)	Thread of terminal
56~80	90x96x50	1-M20x1.5	Φ6-Φ12	M4
90~100	102x110x57.5	1-M25x1.5	Φ13-Φ18	M4
112~132	136x146x72	2-M32x1.5	Φ16-Φ21	M6
160~180	171x181x91	2-M40x1.5	Φ22-Φ32	M8
200~225	220x230x113	2-M50x1.5	Φ32-Φ39	M10
250~280	270x280x116.5	2-M63x1.5	Φ37-Φ44	M12
315	312x329x175	2-M72x2	Φ42-Φ52	M16

Lifting ring

Frame	Lifting ring	Horizontal installation	
		Quantity	Location
56~90S	-	-	-
90L~112	M8	1	A lifting ring mounted on top of the frame
132	M10	1	
160	M12	1	
180	M16	1	
200~225	M20	2	Two lifting rings, viewed from the shaft extension, one at the front left of the terminal box.The other is located behind the terminal box to the right.
250~280	M24	2	
315	M30	2	

Bearing type

IE5 Standard frame siz Bearing type

Frame	Speed r/min	DE	NDE
63	1000-3000	6201ZZ	6201ZZ
71	1000-3000	6202ZZ	6202ZZ
80	1000-3000	6204ZZ	6204ZZ
90	1000-3000	6205ZZ	6203ZZ
100	1000-3000	6206ZZ	6205ZZ
112	1000-3000	6206ZZ	6206ZZ
132	1000-3000	6208ZZ	6305ZZ
160	1000-3000	6309ZZ	6307ZZ
180	1000-3000	6310ZZ	6308ZZ
200	1000-3000	6312	6212
225	3000	6312	6312
225	1000-1500	6313	6312
250	3000	6313	6313
250	1000-1500	6314	6313
280	3000	6314	6314
280	1000-1500	6317	6314
315	3000	6317	6317
315	1000-1500	6319	6319

Note: Bearing selection can be changed according to the requirements of customers' working conditions. Choice angular contact bearings or short cylindrical bearings,for example.

IE5 Smaller frame size Bearing type

Frame	Speed r/min	DE	NDE
63	1000~3000	6201ZZ	6201ZZ
71	1000~3000	6202ZZ	6202ZZ
80	1000~3000	6204ZZ	6204ZZ
90	1000~3000	6205ZZ	6203ZZ
100	1000~3000	6206ZZ	6205ZZ
112	1000~3000	6206ZZ	6206ZZ
132	1000~3000	6208ZZ	6208ZZ
160	1000~3000	6309ZZ	6309ZZ
180	1000~3000	6310ZZ	6308ZZ
200	1000~3000	6312	6212
225	1000~3000	6313	6312
250	1000~3000	6314	6313
280	1000~3000	6317	6314
315	1000~3000	6319	6319

Note: Bearing selection can be changed according to the requirements of customers' working conditions. Choice angular contact bearings or short cylindrical bearings,for example.

IE4 Bearing type

Frame	Speed r/min	DE	NDE
56	1000~3000	6200ZZ	6200ZZ
63	1000~3000	6201ZZ	6201ZZ
71	1000~3000	6202ZZ	6202ZZ
80	1000~3000	6204ZZ	6204ZZ
90	1000~3000	6205ZZ	6203ZZ
100	1000~3000	6206ZZ	6205ZZ
112	1000~3000	6206ZZ	6206ZZ
132	1000~3000	6208ZZ	6208ZZ
160	1000~3000	6309ZZ	6309ZZ
180	1000~3000	6310ZZ	6308ZZ
200	1000~3000	6312	6212
225	1000~3000	6313	6312
250	1000~3000	6314	6313
280	1000~3000	6317	6314
315	1000~3000	6319	6319

Note: Bearing selection can be changed according to the requirements of customers' working conditions. Choice angular contact bearings or short cylindrical bearings,for example.

Ordering guide

The following factors should be taken into account in motor selection:

- Voltage: ☐ 380 V ☐ 660 V ☐ 400 V ☐ 690 V ☐ Others
- Speed: ☐ 3000r/min ☐ 1500r/min ☐ 1000r/min
- Mounting type: ☐ IMB3 ☐ IMB35 ☐ IMB5 ☐ IMV1 ☐ Others
- Operating environment: ☐ Indoor ☐ Outdoor ☐ Ambient temperature ☐ Altitude
- Protection grade: ☐ IP55 ☐ IP56
- Equipment type and moment of inertia of load
- Connection mode between the motor and load
- Start mode, start frequency, start voltage drop, etc
- Operating mode: ☐ S1 ☐ Others
- Insulation grade: ☐ 155 (F) ☐ 180(H)
- Rotation direction: ☐ Clockwise ☐ Counterclockwise ☐ Bidirectional
- Wiring box position: ☐ Top of motor ☐ Bight side of motor ☐ Left side of motor (viewed from the shaft extension end)
- Energy Efficiency Level: ☐ IE5 ☐ IE4

Example

- Requirements: The center height of the frame is 280, 220kW,3000r/min, the frame is with bottom foot, end cover without flange, 380V, clockwise direction, IP55 protection class, insulation class F, efficiency IE4.
  The motors are labeled as follows: WEPM-280S-220-3000 380V IMB3 IP55 F IE4.
- If users have special requirements on voltage, speed, protection level, rotation direction, installation mode, double shaft extension, noise, vibration, and connection of junction box, they should get the approval of technicians before manufacturing.

※ The data in this sample is subject to change without notice. Please pay attention to change to the sample version.

*The final interpretation right of this sample belongs to wolong electric group co., LTD

High Performance Drive & Smart service

WD100 High Performance Drive

Product introduction

WD100 series high-performance vector low-voltage inverter is Wolong's new generation of high-end inverter, which can realize SVC and VC controlling of synchronous motors and asynchronous motors.

Application motor

The WD100 series inverter can drive various types of motors such as asynchronous motors, variable frequency motors, AC servo motors, various synchronous motors, high-speed motors, and spindle motors.

Asynchronous motor Spindle motor Synchronous motor

Application field

WD100 series inverters can be widely used in fans, pumps, compressors, plastics, metallurgy, petroleum and petrochemical, mining machinery, HVAC, textiles, ceramics, glass, machine tools and other industries.

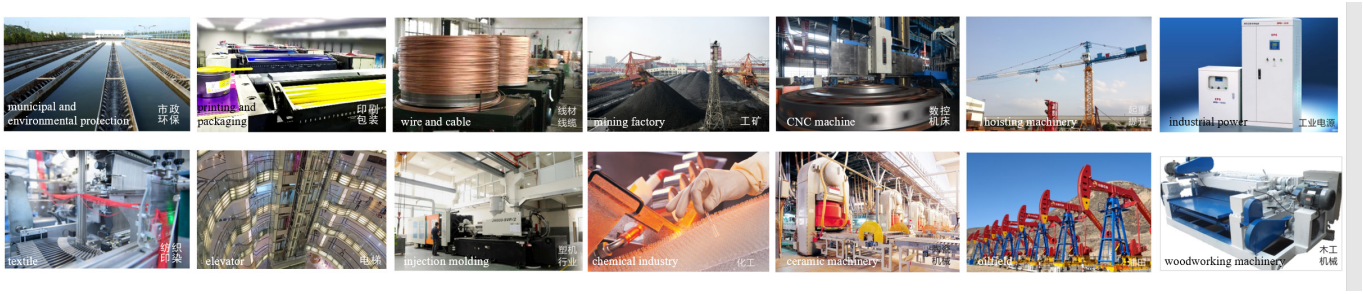

Wolong Digital Service

The supporting digital services for motors are composed of two parts, namely, the edge-side intelligent IoT hardware "iMotor Smart Services" and the iMotorLinx IIOT Platform "iMotor Smart Services". Among them, the iMotorLinx Edge product family consists of wireless temperature and vibration integrated sensors (basic version, advanced version), wired vibration sensors, multi-function acquisition controllers (explosion-proof type, intrinsically safe type, ordinary type), electrical signal collectors, etc.

iMotorLinx Edge

Wireless Temperature Vibration Integrated Sensor

A wireless temperature sensor is a battery-powered wireless sensor that integrates data acquisition and wireless transmission. It measures and pre-processes vibration and temperature data to monitor common problems with rotating equipment, including rotor imbalance, misalignment, mechanical loosening, electrical vibration, bearing damage, etc. The sensor features are as follows:

- Battery powered, no external power required
- Vibration and temperature integrated, compact design for installation, rugged durability
- Wireless communication, data uploaded directly to the server, no need to deploy network equipment on-site
- 0 wiring, no need to lay power cables, signal cables and network cables on site
- Applicable models: All models

Basic Wireless Temperature and Vibration Integrated Sensor

Premium Wireless Temperature and Vibration Integrated Sensor

Multi-function Acquisition Intelligent Controller - Intrinsic safety type

Applicable models: suitable for all types of explosion-proof, conventional H315 and above medium and large industrial motors (including high and low voltage)

Intrinsic safety type ZIX: adapted to increase safety and positive pressure ventilation motors and generators. Explosion-proof safety class Ex Ib IIC T4 Gb

Multi-function Acquisition Intelligent Controller - Explosion-proof

Applicable models: suitable for all types of explosion-proof, conventional H315 and above medium and large industrial motors (including high and low voltage)

Explosion-proof type ZBX: suitable for high and low-pressure explosion-proof motor,explosion-proof safety class:Ex d IIC T6 Gb

The multifunction acquisition controller completely replaces the traditional temperature measurement junction box. An intelligent product integrating signal acquisition, data storage and processing, and intelligent control of a multifunctional acquisition controller. Without changing the traditional configuration, it has the following features:

- Multi-channel and multi-type signal acquisition interfaces, including 4-way vibration signal acquisition, road temperature signal acquisition, etc. It can also provide the data base for the implementation of system software functions
- Multi-channel, multi-type output interfaces, including Ethernet, 4G, RS4 (5), 4-20mA, dry contacts, etc., for easy data communication with other devices or servers
- Intelligent edge computation, capable of cleaning and pre-processing the collected data, extracting fault characteristics, judging equipment start and stop, uploading alarm information according to feature value changes, etc.
- Has the practicability of disconnecting the network, the practicability of network resuming and the convenience of OTA remote upgrade.
- Vibration and temperature information of the device can be displayed locally through the built-in display screen
- Precisely implement intelligent control of motor heaters
- The power box has the function of AC220V/380V to DC24V, which can be used with the acquisition box
- The acquisition box is optionally equipped with AC220V power supply function and can be operated independently
- Inlet standard configuration: M20X1.5 cable glands incoming line
- Optional configuration of access points: customize the number and specification of cable glands according to the needs of the site

iMotor Smart Services

iMotorLinx IIOT Platform provides users with optional online and offline service packages. Equipment operation data is displayed in real time on the platform, and the operation status is displayed by intelligent algorithm with comprehensive health index. For equipment with fault alarm, maintenance work orders can be generated. Meanwhile, online expert diagnosis and offline depth diagnosis can be requested to determine the nature of the fault and disposal opinions. Troubleshooting and maintenance work orders can be pushed to nearby offline service stations for quick response and closed-loop processing.

PC Interface

User Overview

Data visualization, multidimensional statistics, user and device status at a glance

AI Diagnosis

Through data acquisition, further analysis of parameters, such as envelope, power, FFT analysis, etc.

Device Insights

Online diagnosis of device health, multi-dimensional analysis modeling, combined with offline health check-ups, to provide targeted treatment plans

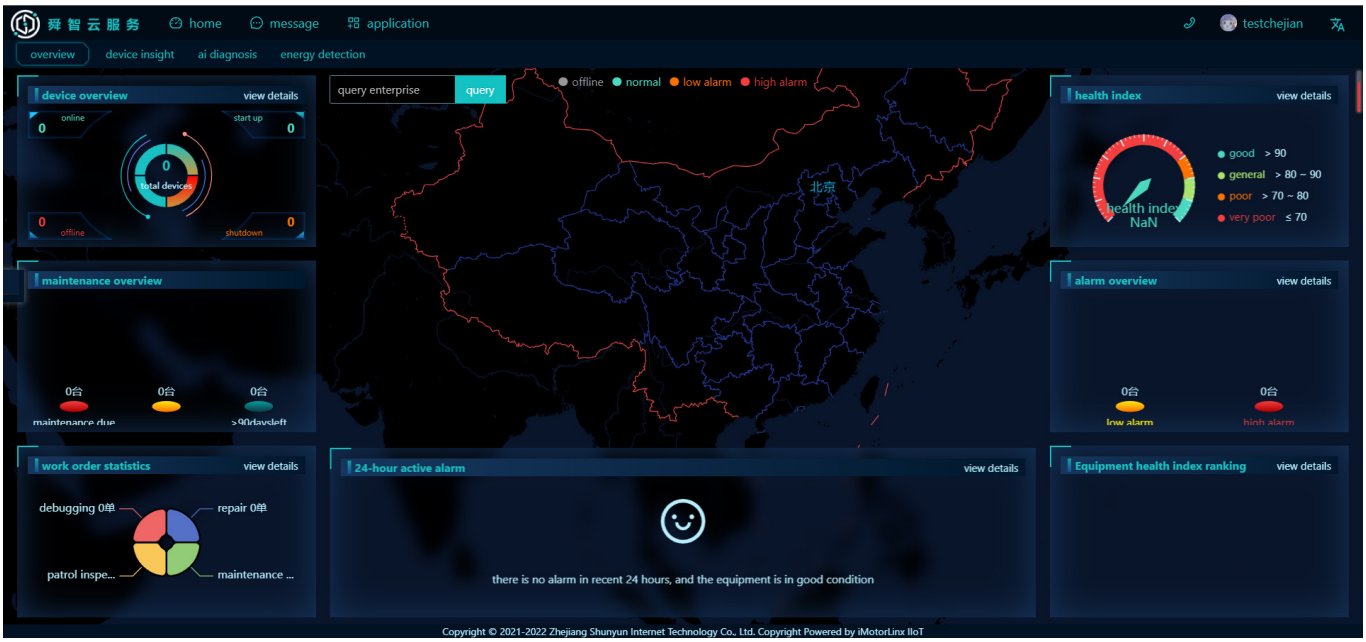

Spare parts

Manage spare parts inventory by entering spare parts for equipment

Equipment management

Create equipment basic information and node architecture to facilitate equipment information maintenance and management operations

Expert Collaboration

Support experts to view real-time images and IoT data in real time for problem diagnosis; Both parties are supported to carry out collaborative interaction through AR tags and 3D models to realize the guidance of background experts to field personnel

APP Interface

Equipment Overview

Provide an overall display of the equipment operation status of the enterprise, including equipment overview, alarm overview, comprehensive health index, etc.

Device Insights

Demonstrate the equipment operating parameters, historical trends, fault alarms, and spectrum analysis

WL_ID_01_WEPM_202211_EN_VER9.0

WOLONG

Power your future

WOLONG ELECTRIC GROUP CO.,LTD.

Add: No. 1801 West Renmin Road, Shangyu District, Shaoxing, Zhejiang, China

Web: www.wolong-electric.com